GESSI

# 58208

GPF58208000000G000

## INCISO

validity date
≥ 10/2018



External parts for wall-mounted thermostatic high-capacity mixer. Vertical/horizontal setting up with FOUR SEPARATE EXITS

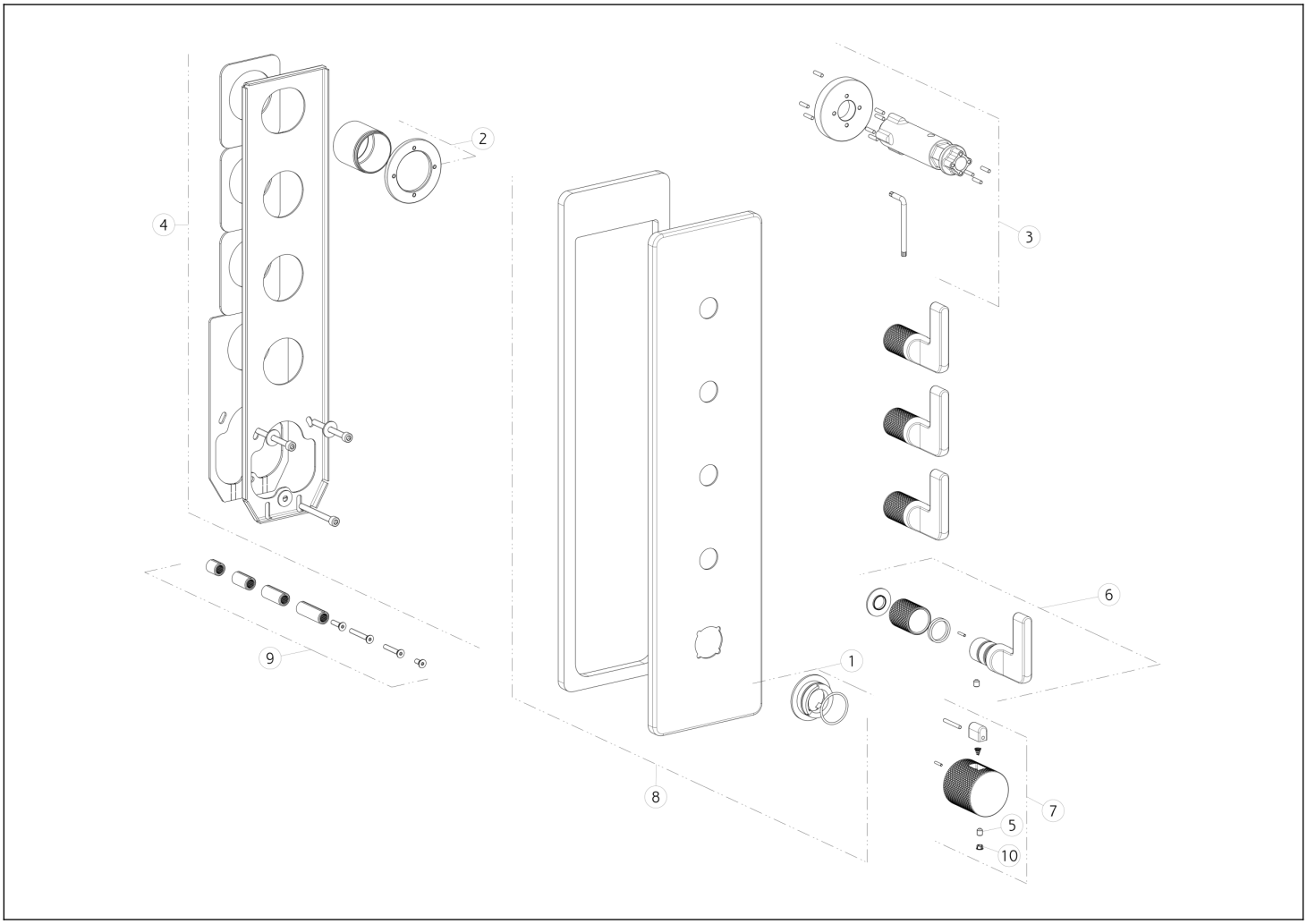


| N° | Code | Description |
|---|---|---|
| 1 | SP01739 | INDICATOR RING |
| 2 | SP01930 | BUSH |
| 3 | SP01932 | SPECIAL TOOL |
| 4 | SP01929 | SUB PLATE |
| 5 | SP00284 | SCREW |

| N° | Code | Description |
|---|---|---|
| 6 | SP01988 | HANDLE |
| 7 | SP02065 | HANDLE |
| 8 | SP02631 | FINISHING PLATE |
| 9 | SP01931 | EXTENSION |
| 10 | SP00002 | SCREW COVER |

 This drawing, as required by law, may not be made public or reproduced without the written authorization of GESSI S.p.A. Copyright GESSI S.p.A.