GESSI

58226

GPF5822600000G000

INCISO

validity date
≥ 02/2019



External parts for wall-mounted thermostatic high-capacity mixer. Vertical/horizontal setting up with THREE SEPARATE EXITS

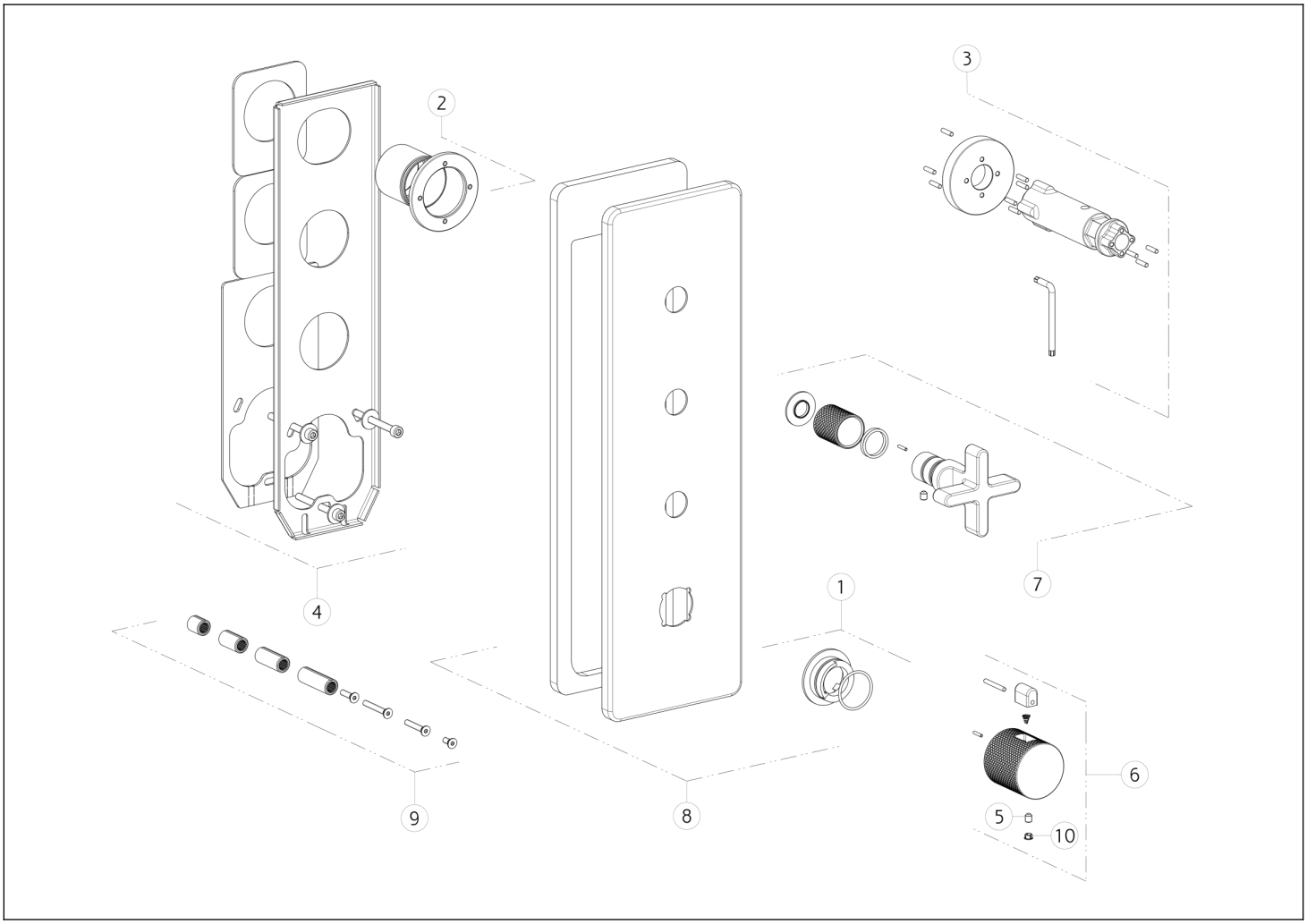

N°	Code	Description
1	SP01739	INDICATOR RING
2	SP01930	BUSH
3	SP01932	SPECIAL TOOL
4	SP02069	SUB PLATE
5	SP00284	SCREW

N°	Code	Description
6	SP02065	HANDLE
7	SP02347	HANDLE
8	SP02458	FINISHING PLATE
9	SP01931	EXTENSION
10	SP00002	SCREW COVER

Gessi S.p.A. Parco Gessi, 13037 Serravalle Sesia (Vercelli) Italy Tel. +39 0163 454111 Fax. +39 0163 453150 - www.gessi.com - gessi@gessi.it This drawing, as required by law, may not be made public or reproduced without the written authorization of GESSI S.p.A. Copyright GESSI S.p.A.