GESSI

58338

GPF58338000000G000

INCISO

validity date
≥ 06/2026

External parts for wall-mounted thermostatic mixer. Vertical/horizontal setting up with four separate exits.

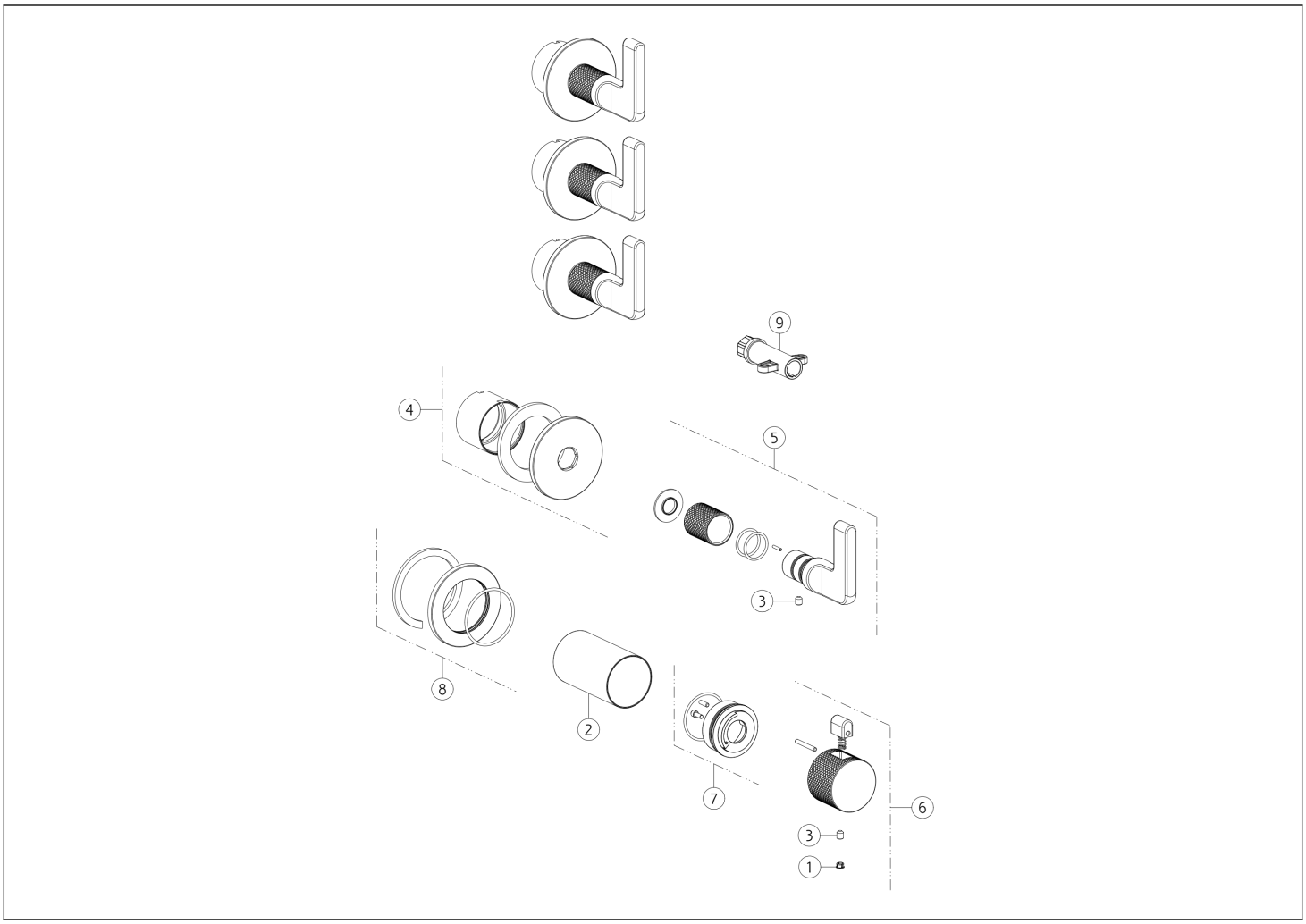

N°	Code	Description
1	SP00002	SCREW COVER
2	SP04168	FINISHING BUSHING
3	SP00284	SCREW
4	SP04161	COVER
5	SP01988	HANDLE

N°	Code	Description
6	SP04568	HANDLE
7	SP01781	INDICATOR RING
8	SP03230	COVER
9	SP01935	SPECIAL TOOL

Gessi S.p.A. Parco Gessi, 13037 Serravalle Sesia (Vercelli) Italy Tel. +39 0163 454111 Fax. +39 0163 453150 - www.gessi.com - gessi@gessi.it This drawing, as required by law, may not be made public or reproduced without the written authorization of GESSI S.p.A. Copyright GESSI S.p.A.