GESSI

58423

GPF5842310000G000

INCISO

validity date
≥ 07/2022



Safety grip-handle for bathtub and shower enclosure, 45 cm length

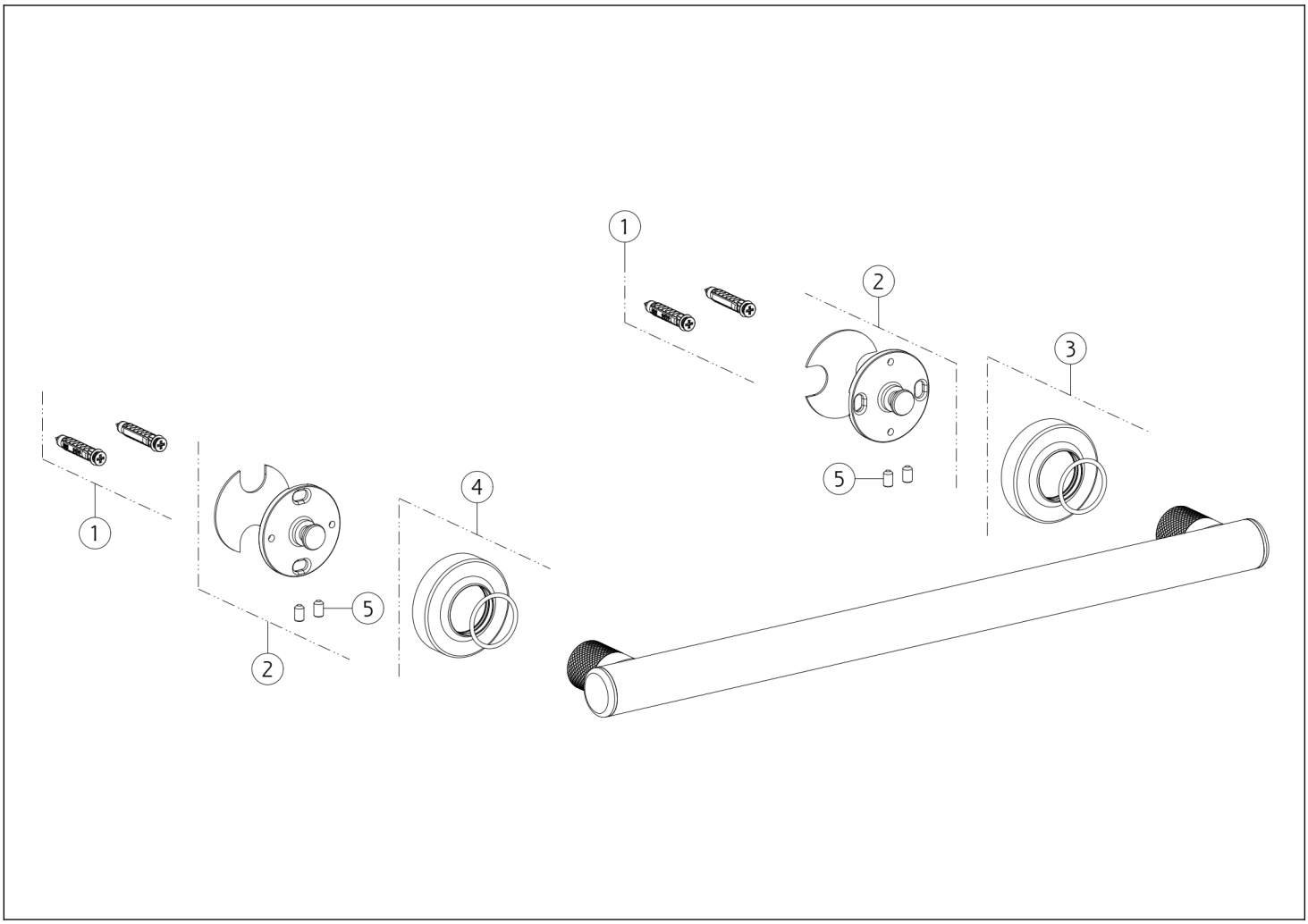

N°	Code	Description
1	SP01271	FIXING KIT
2	SP04384	FLANGE
3	SP05211	ROSETTE

N°	Code	Description
4	SP05739	COVER WITH LOGO
5	SP02227	GRUB SCREW

Gessi S.p.A. Parco Gessi, 13037 Serravalle Sesia (Vercelli) Italy Tel. +39 0163 454111 Fax. +39 0163 453150 - www.gessi.com - gessi@gessi.it This drawing, as required by law, may not be made public or reproduced without the written authorization of GESSI S.p.A. Copyright GESSI S.p.A.