GESSI

58438

GPF5843800000G000

INCISO

validity date
≥ 07/2023



External parts for wall-mounted thermostatic mixer. Vertical/horizontal setting up with four separate exits.

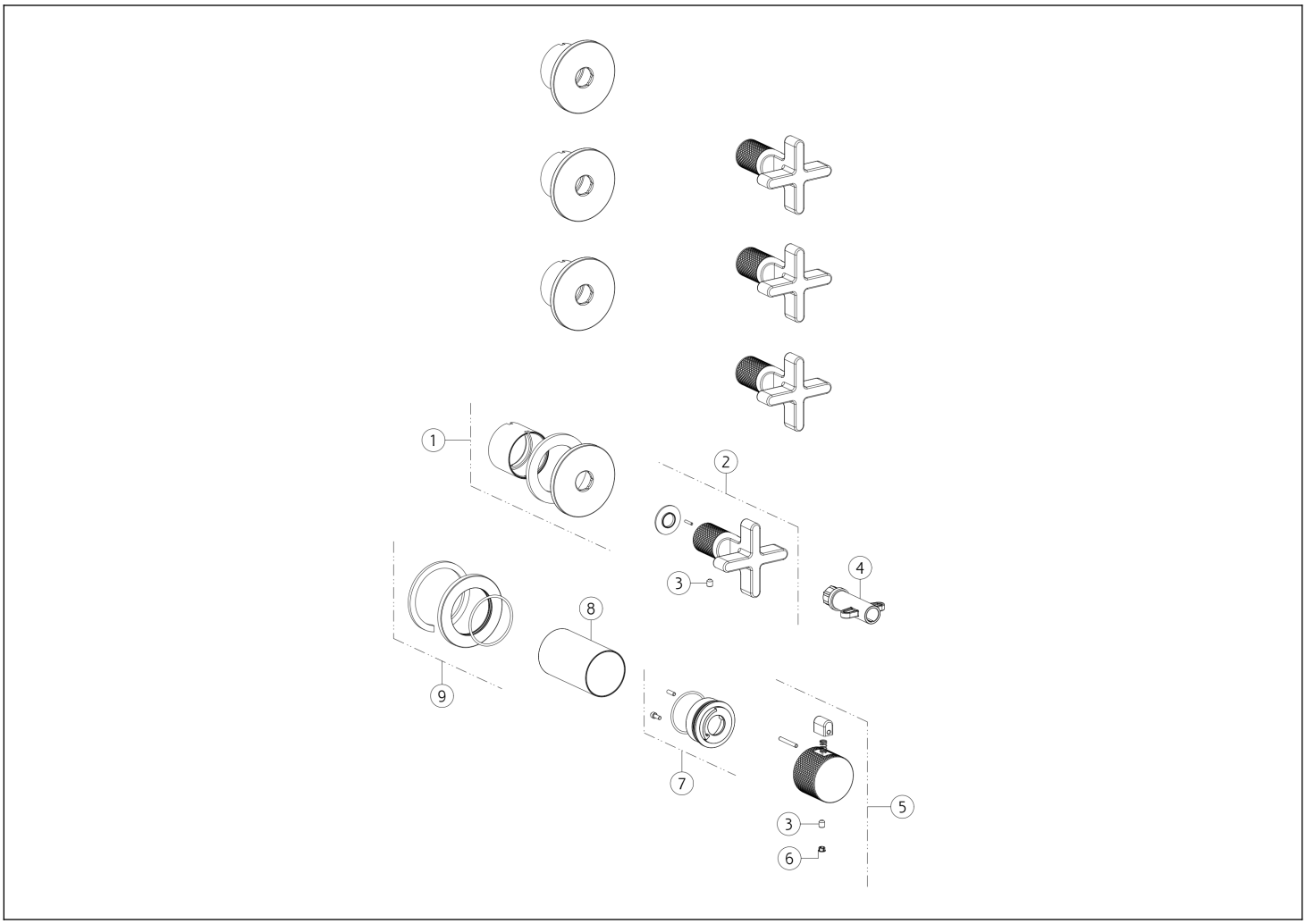

N°	Code	Description
1	SP04161	COVER
2	SP02347	HANDLE
3	SP00018	SCREW
4	SP01935	SPECIAL TOOL
5	SP04568	HANDLE

N°	Code	Description
6	SP00002	SCREW COVER
7	SP01781	INDICATOR RING
8	SP04168	FINISHING BUSHING
9	SP03230	COVER

Gessi S.p.A. Parco Gessi, 13037 Serravalle Sesia (Vercelli) Italy Tel. +39 0163 454111 Fax. +39 0163 453150 - www.gessi.com - gessi@gessi.it This drawing, as required by law, may not be made public or reproduced without the written authorization of GESSI S.p.A. Copyright GESSI S.p.A.