GESSI

58513

GPF58513100000G000

INCISO

validity date
≥ 03/2021



Wall-mounted liquid soap dispenser , white

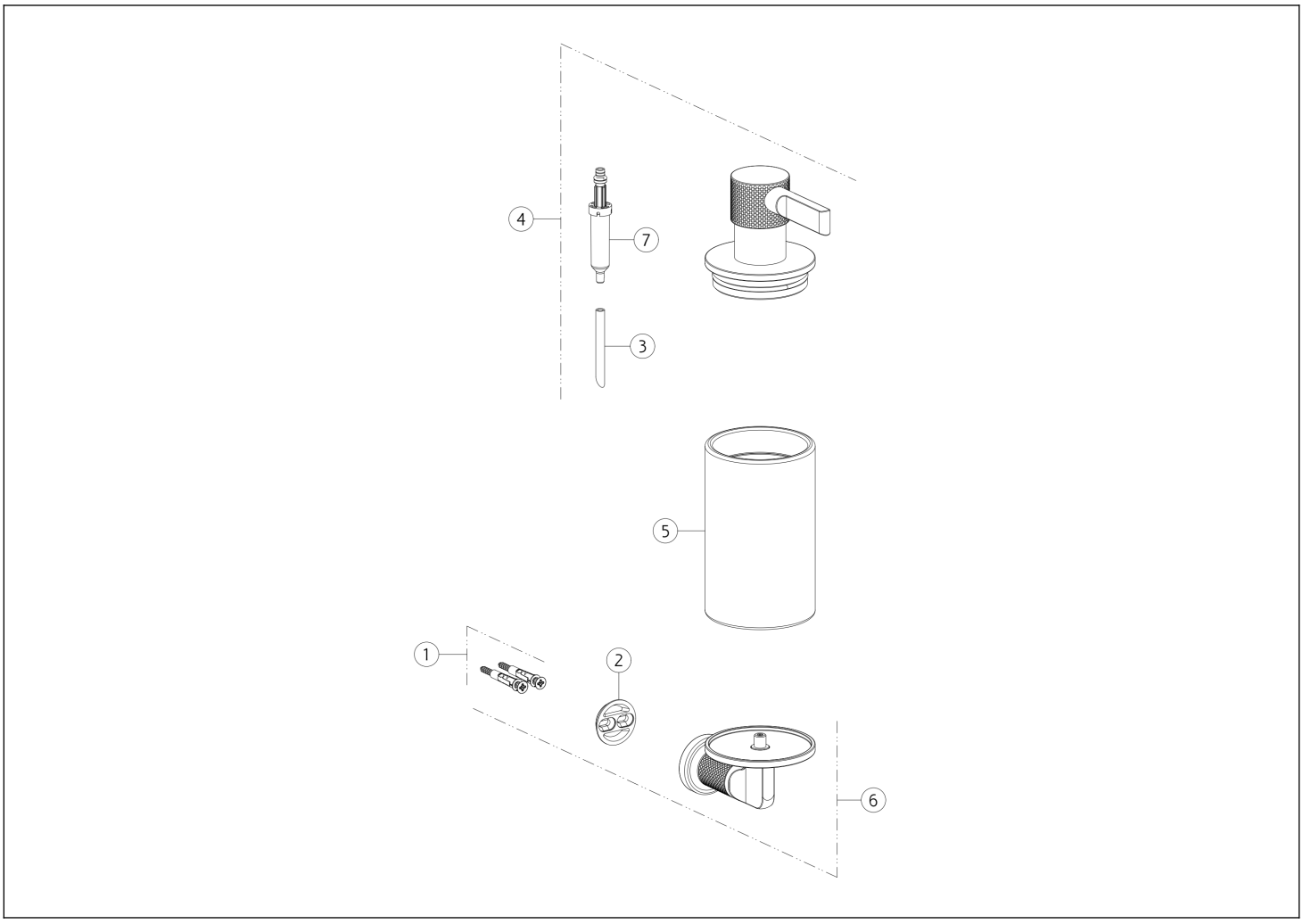

N°	Code	Description
1	SP00031	FIXING KIT
2	SP00043	FIXING RING
3	SP00198	TUBE
4	SP02607	DISPENSER

N°	Code	Description
5	SP02331	TUMBLER
6	SP04307	WALL-MOUNTED HOLDER
7	SP00040	DISPENSER PUMP

Gessi S.p.A. Parco Gessi, 13037 Serravalle Sesia (Vercelli) Italy Tel. +39 0163 454111 Fax. +39 0163 453150 - www.gessi.com - gessi@gessi.it This drawing, as required by law, may not be made public or reproduced without the written authorization of GESSI S.p.A. Copyright GESSI S.p.A.