GESSI

58514

GPF58514100000G000

validity date
≥ 03/2021



INCISO

Wall-mounted liquid soap dispenser - black

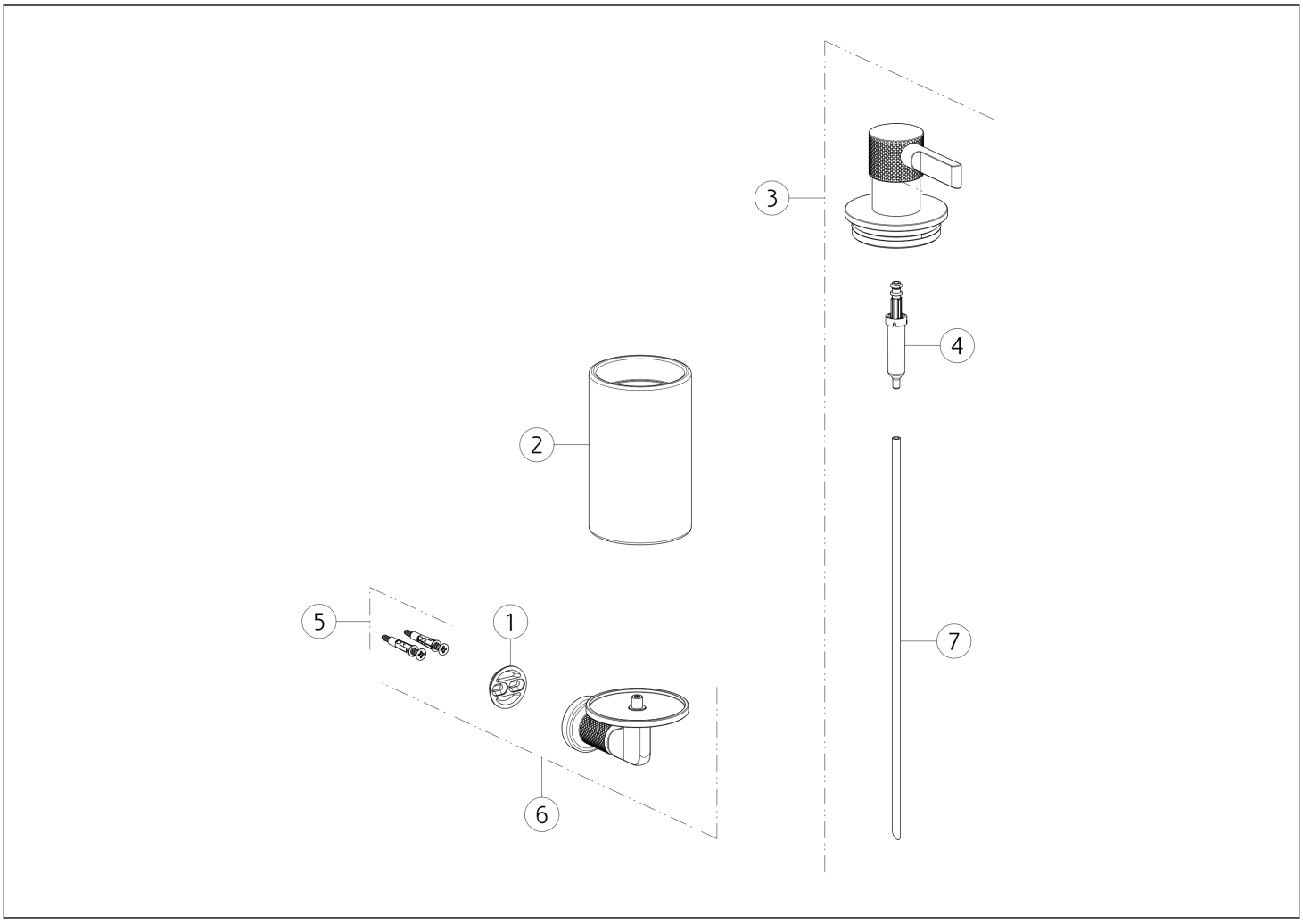

N°	Code	Description
1	SP00043	FIXING RING
2	SP02333	GLASS
3	SP02607	DISPENSER
4	SP00040	DISPENSER PUMP

N°	Code	Description
5	SP00031	FIXING SET
6	SP04307	WALL SUPPORT
7	SP00198	TUBE

Gessi S.p.A. Parco Gessi, 13037 Serravalle Sesia (Vercelli) Italy Tel. +39 0163 454111 Fax. +39 0163 453150 - www.gessi.com - gessi@gessi.it This drawing, as required by law, may not be made public or reproduced without the written authorization of GESSI S.p.A. Copyright GESSI S.p.A.