GESSI

58519

GPF58519100000G000

INCISO

validity date
≥ 02/2021



Wall-mounted brush holder, white

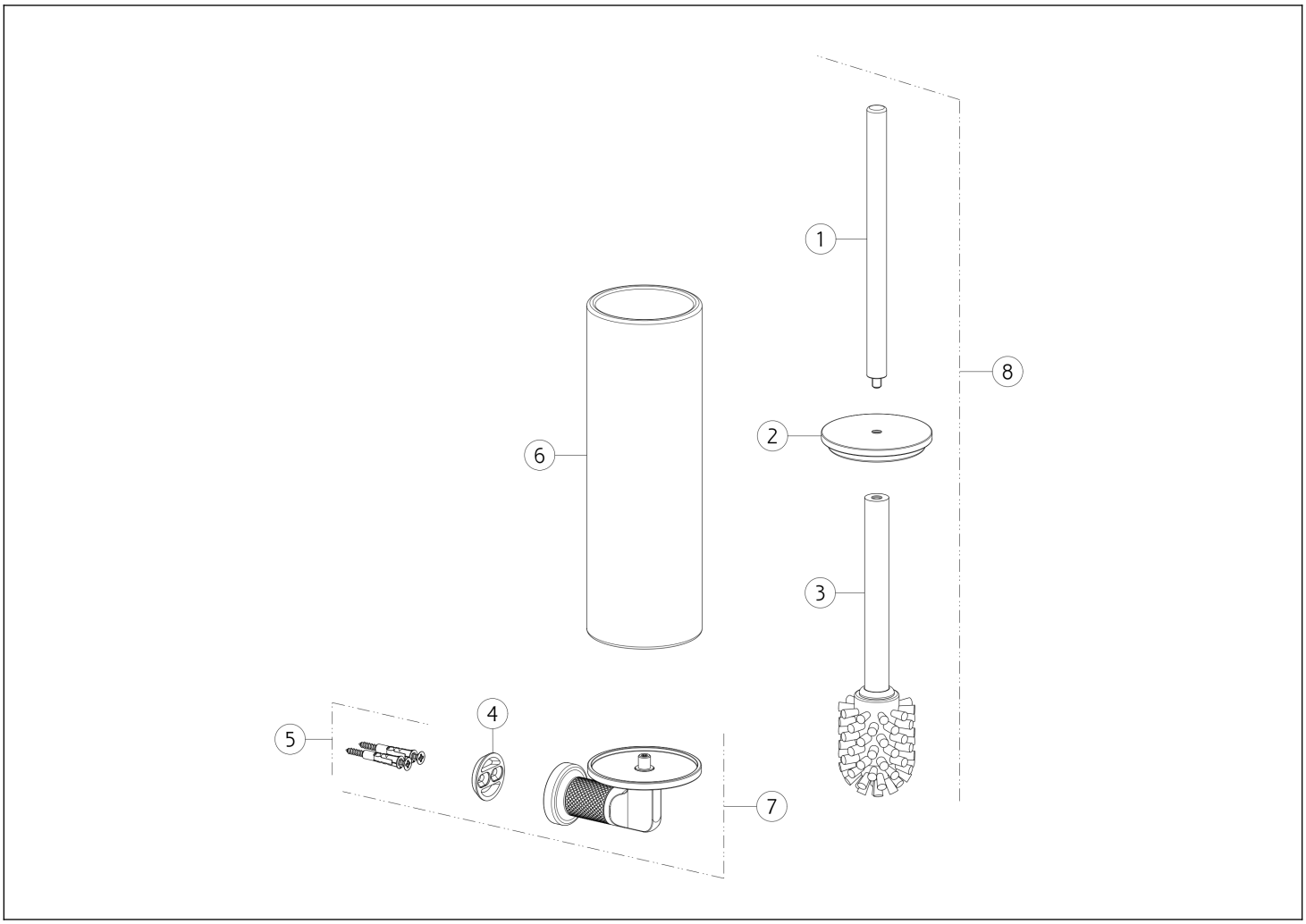

N°	Code	Description
1	SP00199	KNOB
2	SP02615	DISC
3	SP00870	BRUSH HEAD
4	SP00043	FIXING RING

N°	Code	Description
5	SP00031	FIXING KIT
6	SP02520	TOILET BRUSH HOLDER
7	SP04307	WALL-MOUNTED HOLDER
8	SP03720	BRUSH WITH HANDLE

Gessi S.p.A. Parco Gessi, 13037 Serravalle Sesia (Vercelli) Italy Tel. +39 0163 454111 Fax. +39 0163 453150 - www.gessi.com - gessi@gessi.it This drawing, as required by law, may not be made public or reproduced without the written authorization of GESSI S.p.A. Copyright GESSI S.p.A.