GESSI

59001

GPF59001100000G000

RILIEVO

validity date
≥ 09/2020



Basin mixer, flexible connections, with waste. Ø25 mm cartridge

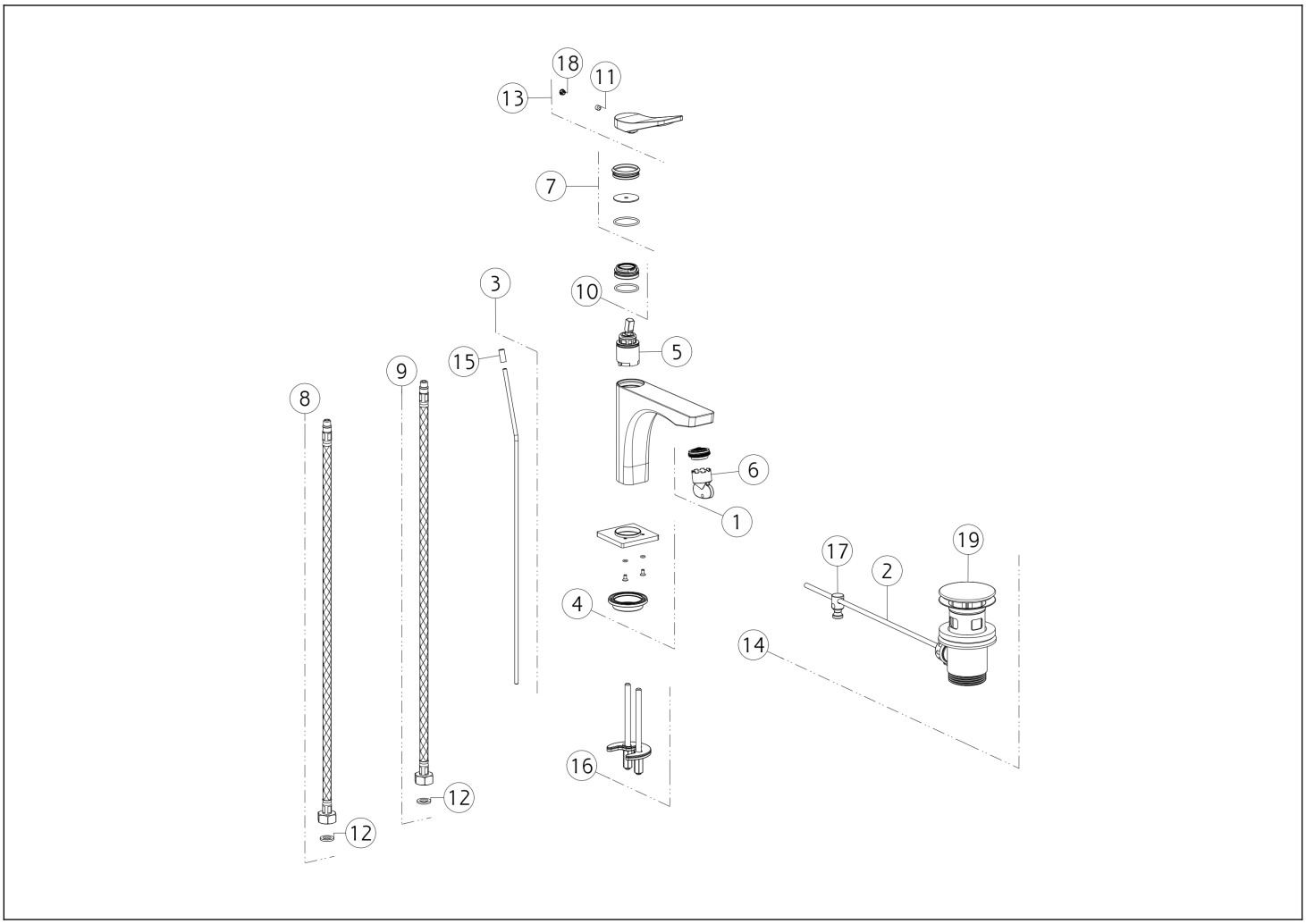

N°	Code	Description
1	SP00757	AERATOR
2	SP00218	ROD
3	SP00069	PULL ROD
4	SP02464	BASE
5	SP01442	CARTRIDGE
6	SP00010	SPECIAL TOOL
7	SP02463	FINISHING RING NUT
8	SP01284	BLU SUPPLY HOSE
9	SP01285	RED SUPPLY HOSE
10	SP01278	FIXING RING NUT

N°	Code	Description
11	SP00610	SCREW
12	SP00064	GASKET
13	SP02380	HANDLE
14	PF29263	BASIN WASTE
15	SP03082	KNOB
16	SP03585	FIXING SET
17	SP00219	JOINT
18	SP00002	SCREW COVER
19	SP00772	PLUG

Gessi S.p.A. Parco Gessi, 13037 Serravalle Sesia (Vercelli) Italy Tel. +39 0163 454111 Fax. +39 0163 453150 - www.gessi.com - gessi@gessi.it This drawing, as required by law, may not be made public or reproduced without the written authorization of GESSI S.p.A. Copyright GESSI S.p.A.