GESSI

59003

GPF59003000000G000

RILIEVO

validity date
≥ 05/2018



High basin mixer, flexible connections, with waste. Ø25 mm cartridge

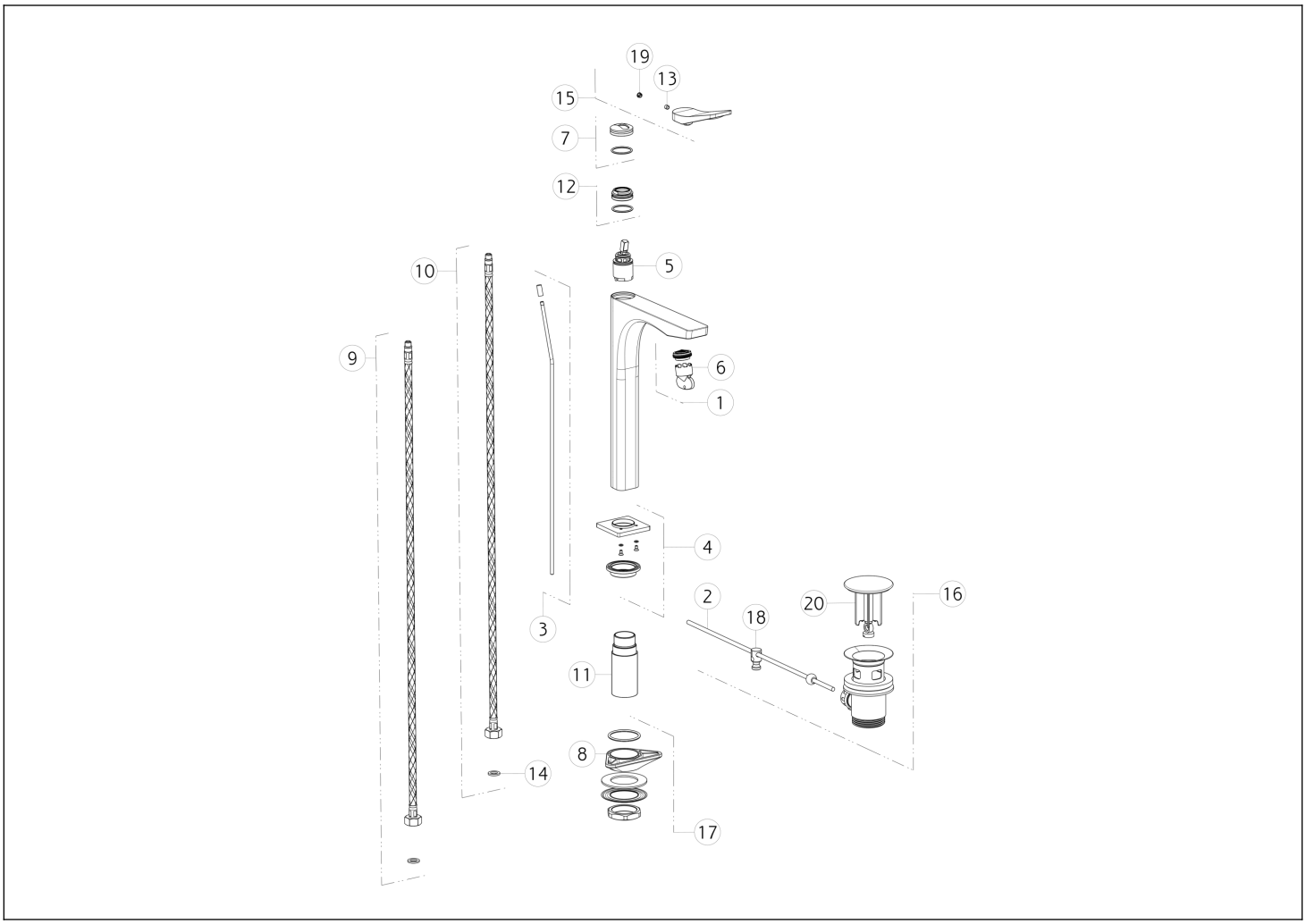

N°	Code	Description
1	SP00757	AERATOR
2	SP00218	ROD
3	SP00069	PULL ROD
4	SP02464	BASE
5	SP01442	CARTRIDGE
6	SP00010	SPECIAL TOOL
7	SP02463	FINISHING RING NUT
8	SP00329	TRIANGULAR FLANGE
9	SP01286	BLU SUPPLY HOSE
10	SP01287	RED SUPPLY HOSE

N°	Code	Description
11	SP02465	SHANK
12	SP01278	FIXING RING NUT
13	SP00610	SCREW
14	SP00064	GASKET
15	SP02380	HANDLE
16	PF29263	BASIN WASTE
17	SP01250	FIXING SET
18	SP00219	JOINT
19	SP00002	SCREW COVER
20	SP00772	PLUG

Gessi S.p.A. Parco Gessi, 13037 Serravalle Sesia (Vercelli) Italy Tel. +39 0163 454111 Fax. +39 0163 453150 - www.gessi.com - gessi@gessi.it This drawing, as required by law, may not be made public or reproduced without the written authorization of GESSI S.p.A. Copyright GESSI S.p.A.