GESSI

59006

GPF5900610000G000

RILIEVO

validity date
≥ 07/2021



Basin mixer, flexible connections, without waste. Ø35 mm cartridge

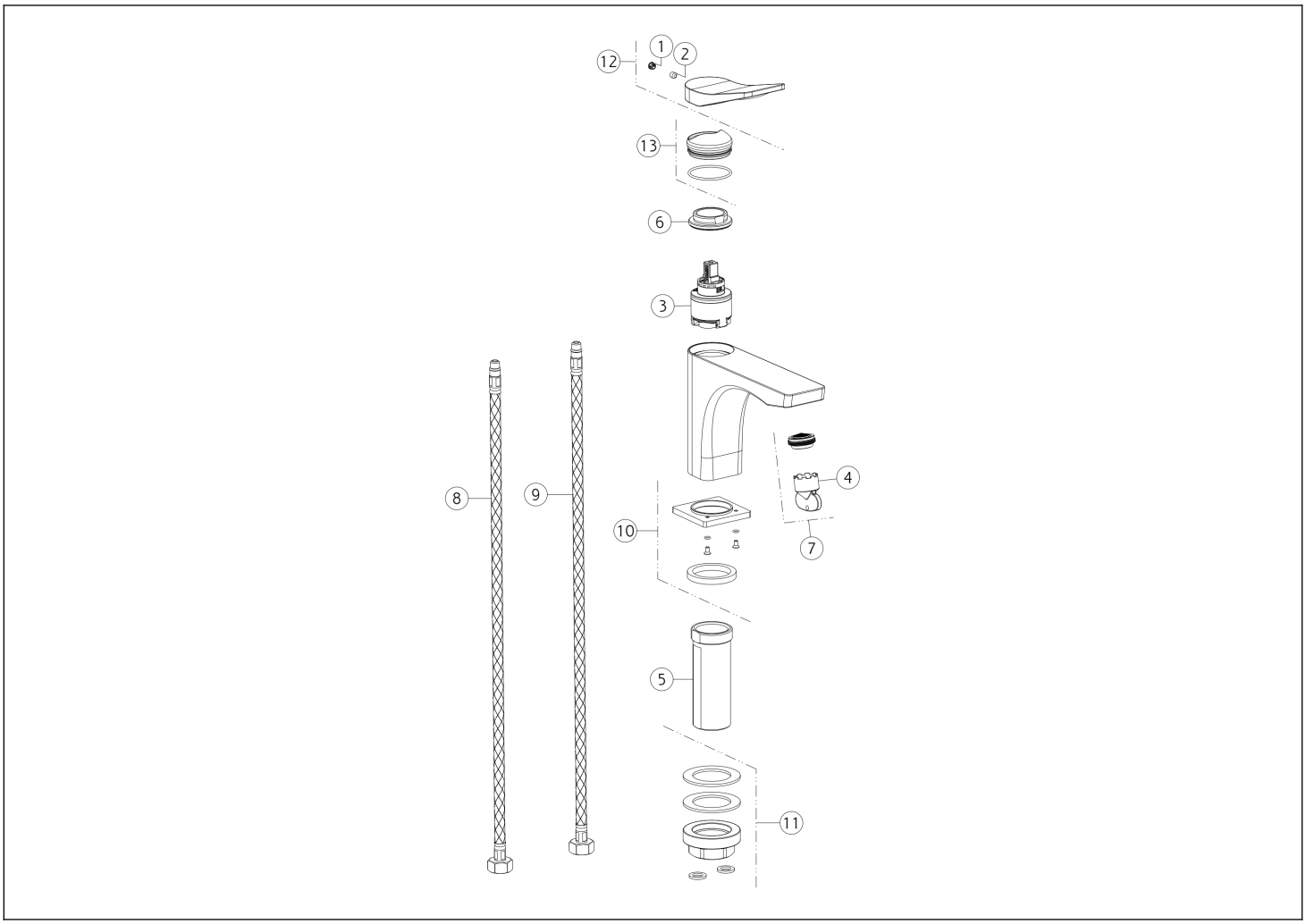

N°	Code	Description
1	SP00002	SCREW COVER
2	SP00610	SCREW
3	SP00992	CARTRIDGE
4	SP00010	SPECIAL TOOL
5	SP01701	SHANK
6	SP00020	FIXING RING NUT
7	SP00757	AERATOR

N°	Code	Description
8	SP01285	RED SUPPLY HOSE
9	SP01284	BLU SUPPLY HOSE
10	SP03171	BASE
11	SP02370	FIXING SET
12	SP02415	HANDLE
13	SP02466	FINISHING RING NUT

Gessi S.p.A. Parco Gessi, 13037 Serravalle Sesia (Vercelli) Italy Tel. +39 0163 454111 Fax. +39 0163 453150 - www.gessi.com - gessi@gessi.it This drawing, as required by law, may not be made public or reproduced without the written authorization of GESSI S.p.A. Copyright GESSI S.p.A.