GESSI

59007

GPF5900710000G000

RILIEVO

validity date
≥ 06/2020



Bidet mixer with flexible connections

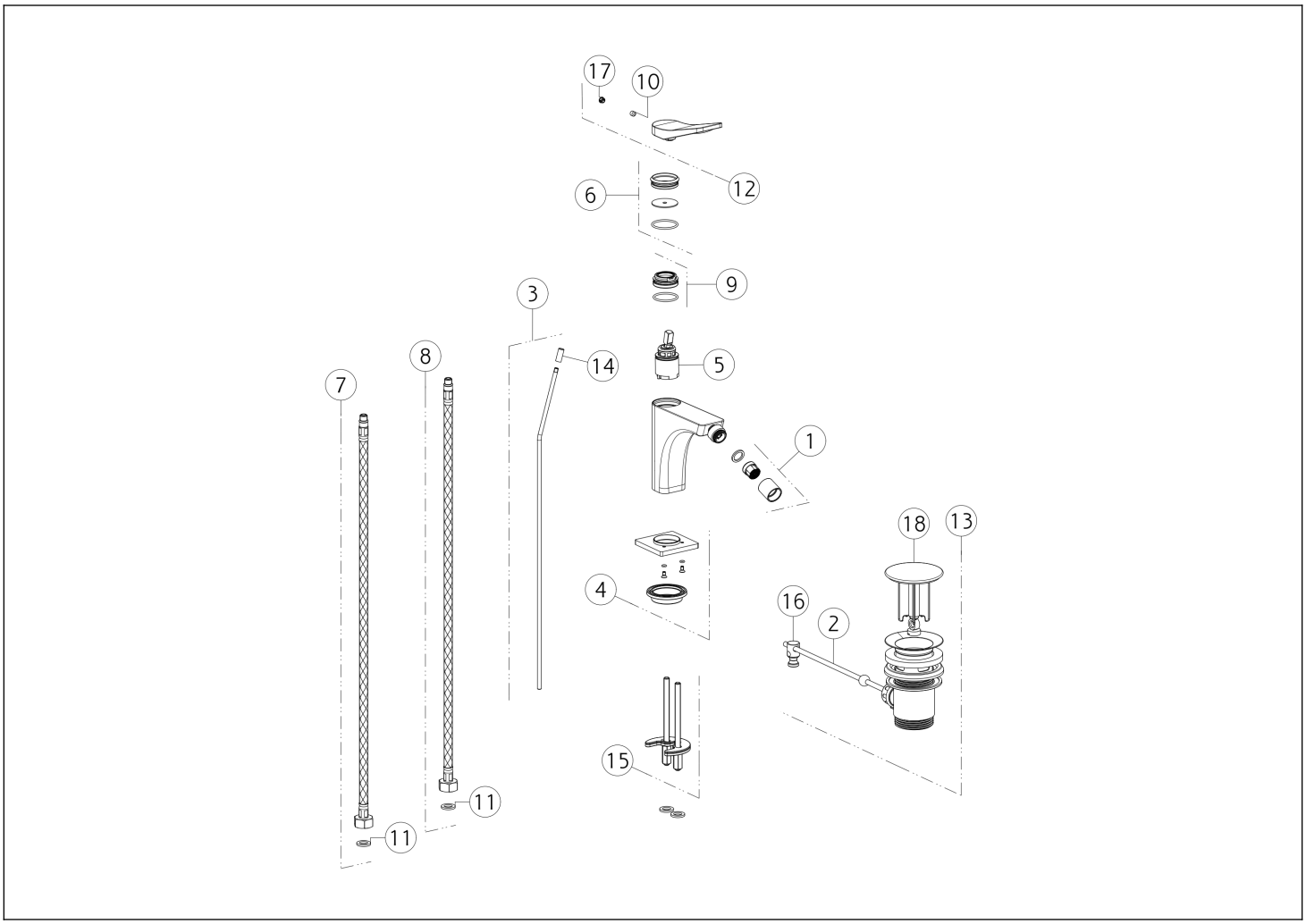

N°	Code	Description
1	SP02280	AERATOR
2	SP00220	ROD
3	SP00069	PULL ROD
4	SP02464	BASE
5	SP01442	CARTRIDGE
6	SP02463	FINISHING RING NUT
7	SP01284	BLU SUPPLY HOSE
8	SP01285	RED SUPPLY HOSE
9	SP01278	FIXING RING NUT

N°	Code	Description
10	SP00610	SCREW
11	SP00064	GASKET
12	SP02380	HANDLE
13	PF29264	BASIN WASTE
14	SP03082	KNOB
15	SP03585	FIXING SET
16	SP00219	JOINT
17	SP00002	SCREW COVER
18	SP00772	PLUG

Gessi S.p.A. Parco Gessi, 13037 Serravalle Sesia (Vercelli) Italy Tel. +39 0163 454111 Fax. +39 0163 453150 - www.gessi.com - gessi@gessi.it This drawing, as required by law, may not be made public or reproduced without the written authorization of GESSI S.p.A. Copyright GESSI S.p.A.