GESSI

59010

GPF59010010000G000

RILIEVO

validity date
≥ 01/2021



High basin mixer, flexible connections, without waste. Ø35 mm cartridge

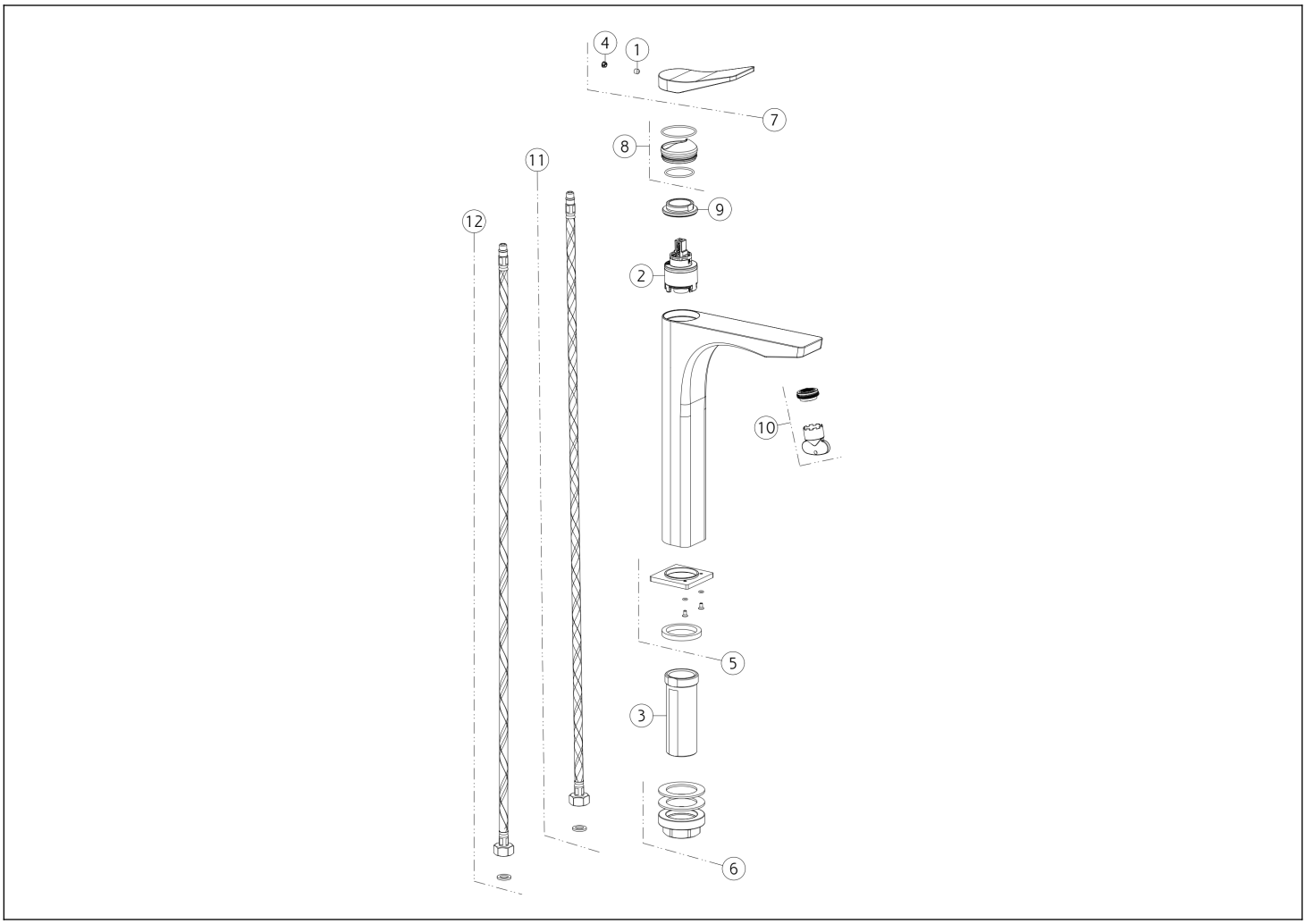

N°	Code	Description
1	SP00610	SCREW
2	SP00992	CARTRIDGE
3	SP01701	SHANK
4	SP00002	SCREW COVER
5	SP03171	BASE
6	SP02370	FIXING SET

N°	Code	Description
7	SP02415	HANDLE
8	SP02466	FINISHING RING NUT
9	SP00020	FIXING RING NUT
10	SP00757	AERATOR
11	SP01287	RED SUPPLY HOSE
12	SP01286	BLU SUPPLY HOSE

Gessi S.p.A. Parco Gessi, 13037 Serravalle Sesia (Vercelli) Italy Tel. +39 0163 454111 Fax. +39 0163 453150 - www.gessi.com - gessi@gessi.it This drawing, as required by law, may not be made public or reproduced without the written authorization of GESSI S.p.A. Copyright GESSI S.p.A.