GESSI

59013

GPF5901300000G000

RILIEVO

validity date
≥ 06/2018



External bath mixer with automatic bath/shower diverter

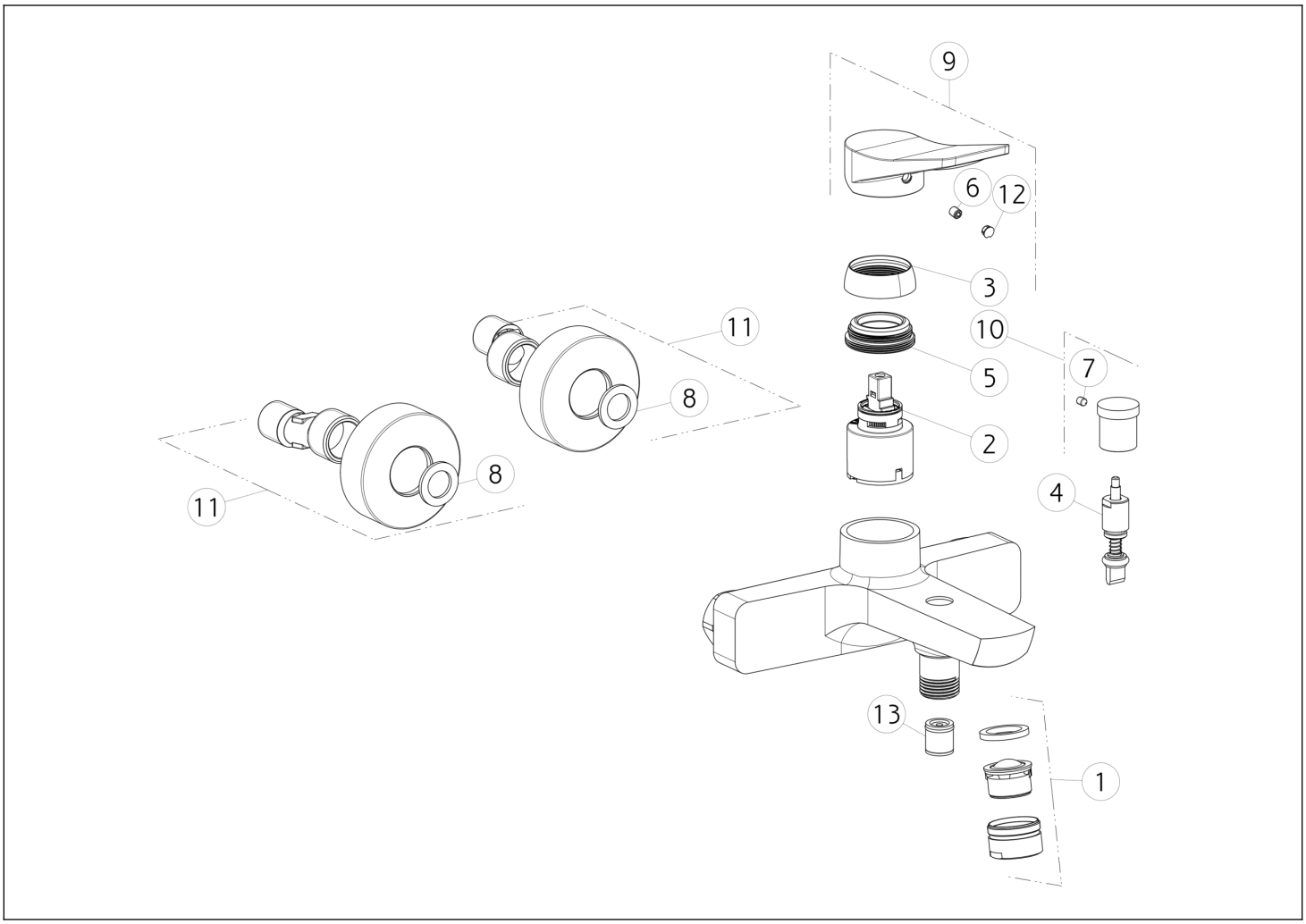

N°	Code	Description
1	SP00853	COMPLETE AERATOR
2	SP00013	CARTRIDGE
3	SP02481	FINISHING RING NUT
4	SP02433	DIVERTER
5	SP02420	FIXING RING NUT
6	SP00284	SCREW
7	SP01412	SCREW

N°	Code	Description
8	SP00154	GASKET
9	SP02381	HANDLE
10	SP00259	KNOB
11	SP02070	COVER
12	SP00002	SCREW COVER
13	SP00014	NON RETURN VALVE

Gessi S.p.A. Parco Gessi, 13037 Serravalle Sesia (Vercelli) Italy Tel. +39 0163 454111 Fax. +39 0163 453150 - www.gessi.com - gessi@gessi.it This drawing, as required by law, may not be made public or reproduced without the written authorization of GESSI S.p.A. Copyright GESSI S.p.A.