GESSI

59031

GPF59031000000G000

RILIEVO

validity date
≥ 06/2018



External shower mixer

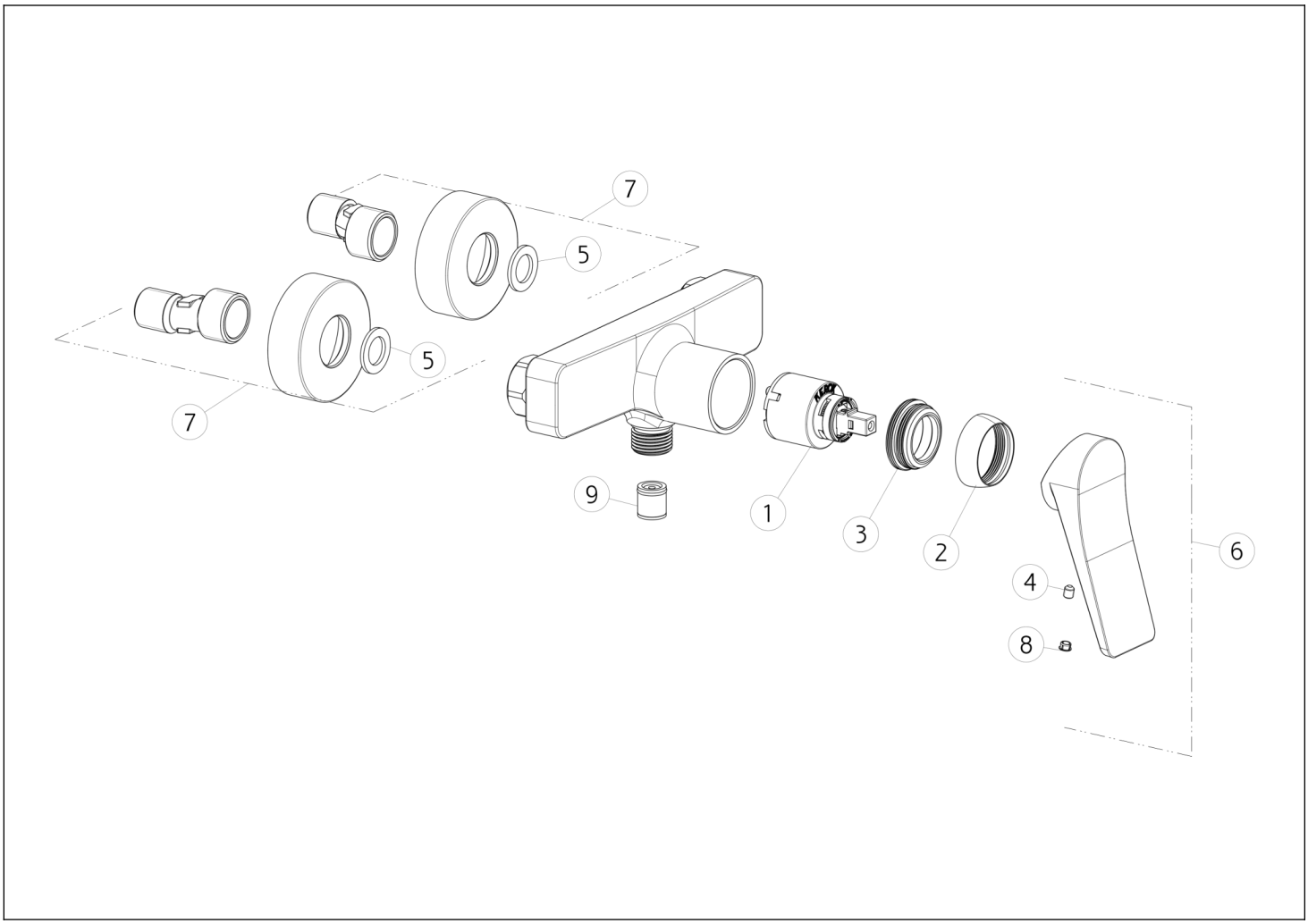

N°	Code	Description
1	SP00013	CARTRIDGE
2	SP02481	FINISHING RING NUT
3	SP02420	FIXING RING NUT
4	SP00284	SCREW
5	SP00154	GASKET

N°	Code	Description
6	SP02381	HANDLE
7	SP02070	COVER
8	SP00002	SCREW COVER
9	SP00014	NON RETURN VALVE

Gessi S.p.A. Parco Gessi, 13037 Serravalle Sesia (Vercelli) Italy Tel. +39 0163 454111 Fax. +39 0163 453150 - www.gessi.com - gessi@gessi.it This drawing, as required by law, may not be made public or reproduced without the written authorization of GESSI S.p.A. Copyright GESSI S.p.A.