GESSI

59061

GPF59061000000G000

RILIEVO

validity date
≥ 03/2019



External parts mixer one-way diverter

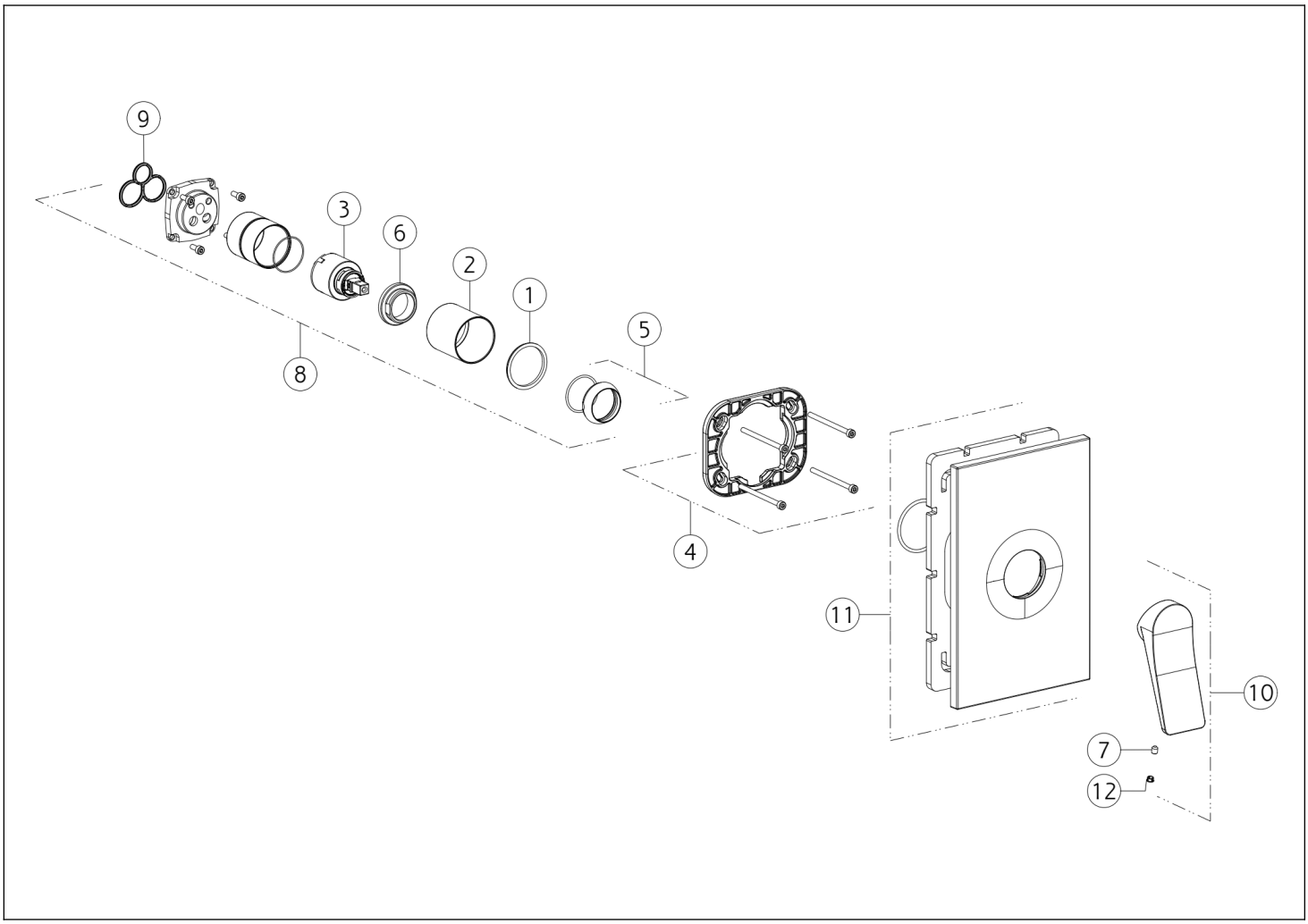

N°	Code	Description
1	SP00545	INDICATOR RING
2	SP03951	FINISHING BUSHING
3	SP00013	CARTRIDGE
4	SP00576	SUB PLATE
5	SP00565	FINISHING RING NUT
6	SP00023	FIXING RING NUT

N°	Code	Description
7	SP00284	SCREW
8	SP00562	CARTRIDGE GROUP
9	SP00506	GASKET
10	SP02381	HANDLE
11	SP00577	FINISHING PLATE
12	SP00002	SCREW COVER

Gessi S.p.A. Parco Gessi, 13037 Serravalle Sesia (Vercelli) Italy Tel. +39 0163 454111 Fax. +39 0163 453150 - www.gessi.com - gessi@gessi.it This drawing, as required by law, may not be made public or reproduced without the written authorization of GESSI S.p.A. Copyright GESSI S.p.A.