GESSI

59079

GPF59079000000G000

RILIEVO

validity date
≥ 05/2018



External parts for wall-mounted mixer two-way, automatic bath/ shower diverter

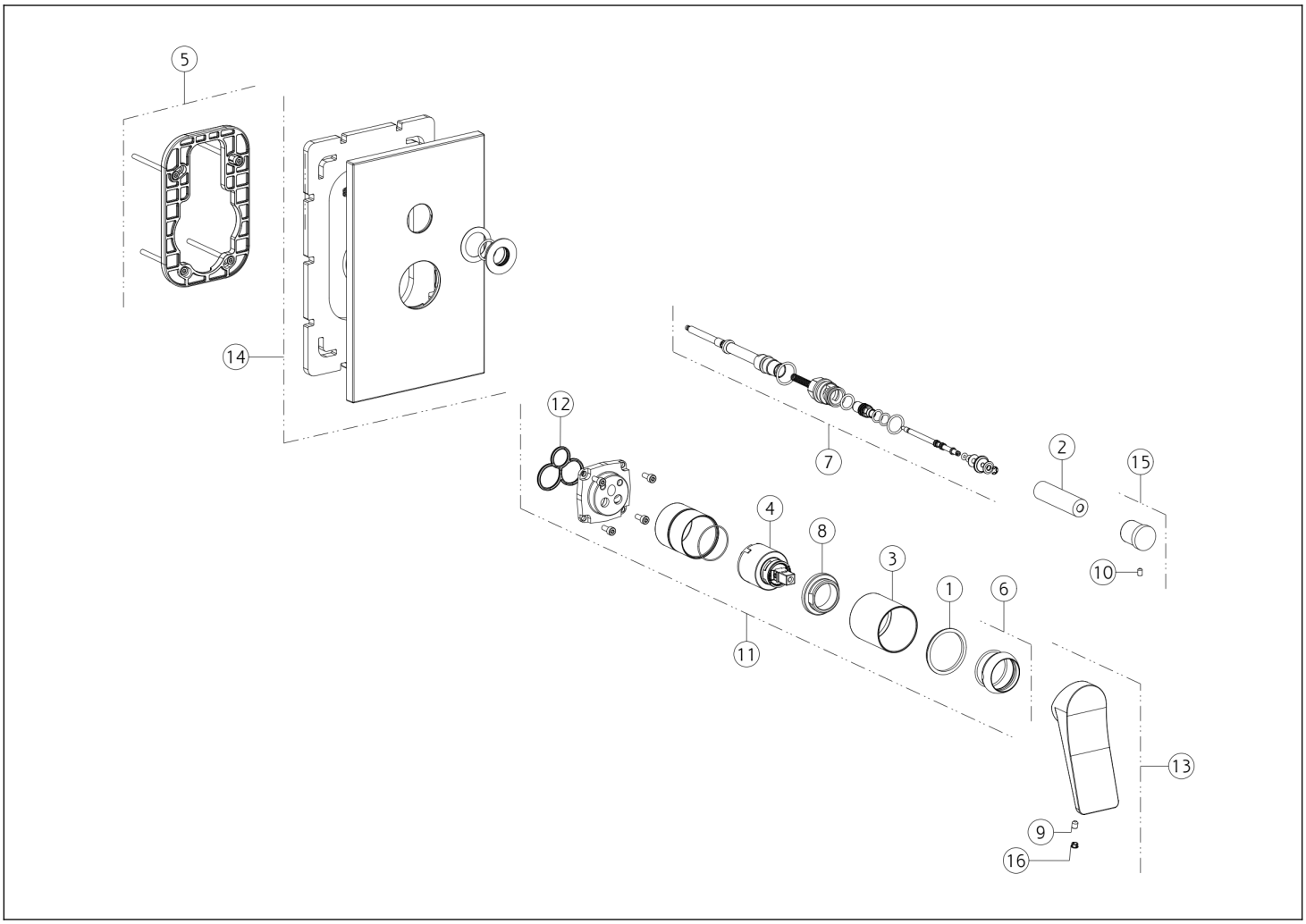

N°	Code	Description
1	SP00545	INDICATOR RING
2	SP00086	BUSH
3	SP03951	FINISHED BUSH
4	SP00013	CARTRIDGE
5	SP00805	BACK PLATE
6	SP00565	FINISHING RING NUT
7	SP00145	DIVERTER
8	SP00023	FIXING RING NUT

N°	Code	Description
9	SP00284	GRUB SCREW
10	SP01412	GRUB SCREW
11	SP00562	CARTRIDGE GROUP
12	SP00506	GASKET
13	SP02381	HANDLE
14	SP00136	FINISHING PLATE
15	SP00259	KNOB
16	SP00002	SCREW COVER

Gessi S.p.A. Parco Gessi, 13037 Serravalle Sesia (Vercelli) Italy Tel. +39 0163 454111 Fax. +39 0163 453150 - www.gessi.com - gessi@gessi.it This drawing, as required by law, may not be made public or reproduced without the written authorization of GESSI S.p.A. Copyright GESSI S.p.A.