GESSI

59089

GPF59089000000G000

RILIEVO

validity date
≥ 02/2019

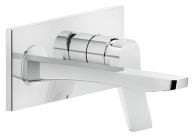

External parts wall-mounted mixer, medium spout, without waste

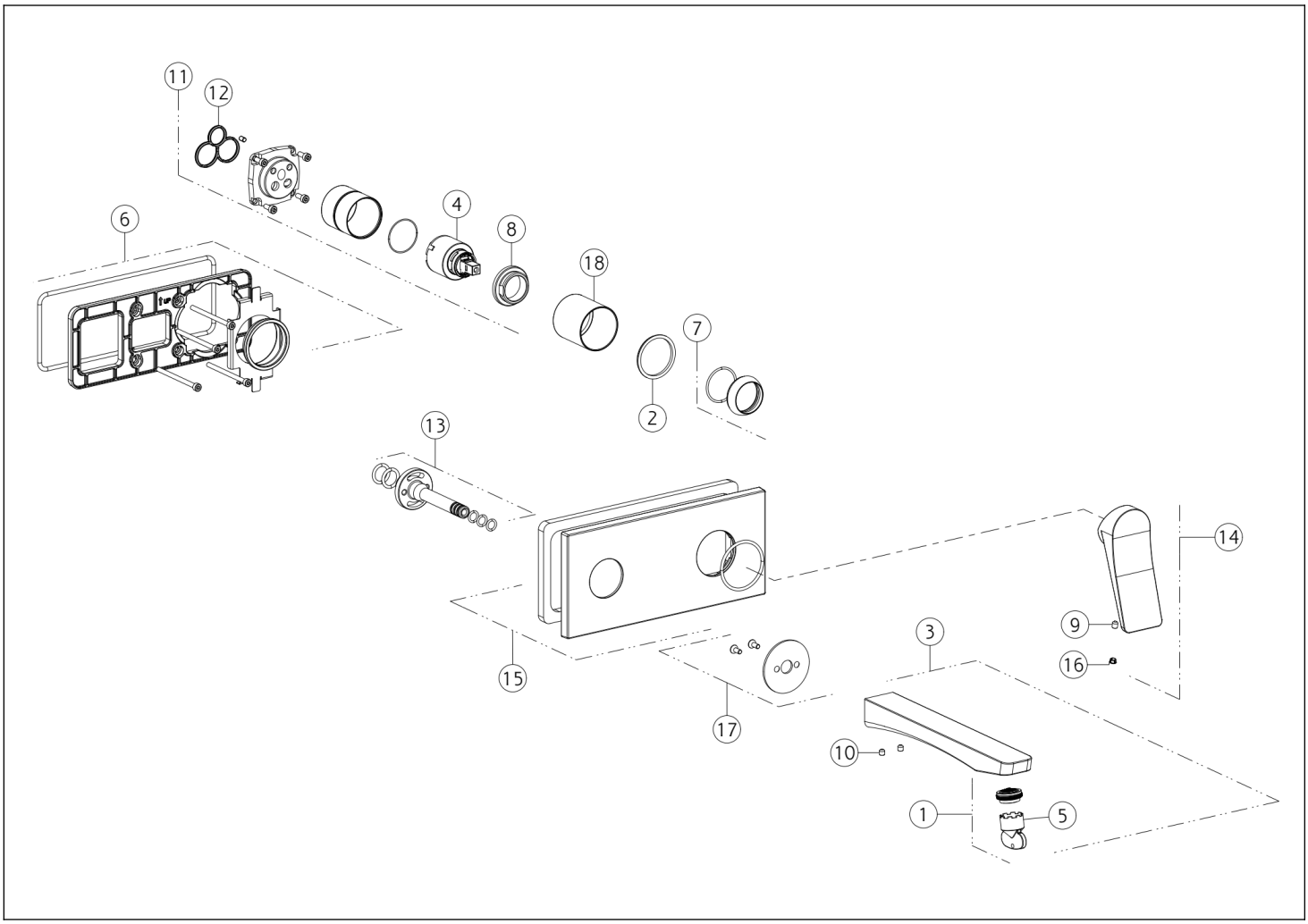

N°	Code	Description
1	SP00757	AERATOR
2	SP00545	INDICATOR RING
3	SP02434	SPOUT
4	SP00013	CARTRIDGE
5	SP00010	SPECIAL TOOL
6	SP01587	SUB PLATE
7	SP00565	FINISHING RING NUT
8	SP00023	FIXING RING NUT
9	SP00284	SCREW

N°	Code	Description
10	SP00610	SCREW
11	SP01040	CARTRIDGE GROUP
12	SP00506	GASKET
13	SP00572	JOINT
14	SP02381	HANDLE
15	SP00573	FINISHING PLATE
16	SP00002	SCREW COVER
17	SP03090	FINISHING PLATE
18	SP03951	FINISHING BUSHING

Gessi S.p.A. Parco Gessi, 13037 Serravalle Sesia (Vercelli) Italy Tel. +39 0163 454111 Fax. +39 0163 453150 - www.gessi.com - gessi@gessi.it This drawing, as required by law, may not be made public or reproduced without the written authorization of GESSI S.p.A. Copyright GESSI S.p.A.