GESSI

59127

GPF5912700000G000

RILIEVO

validity date
≥ 01/2021



Conical shower hook with antilimestone handshower and 1,5 m flexible

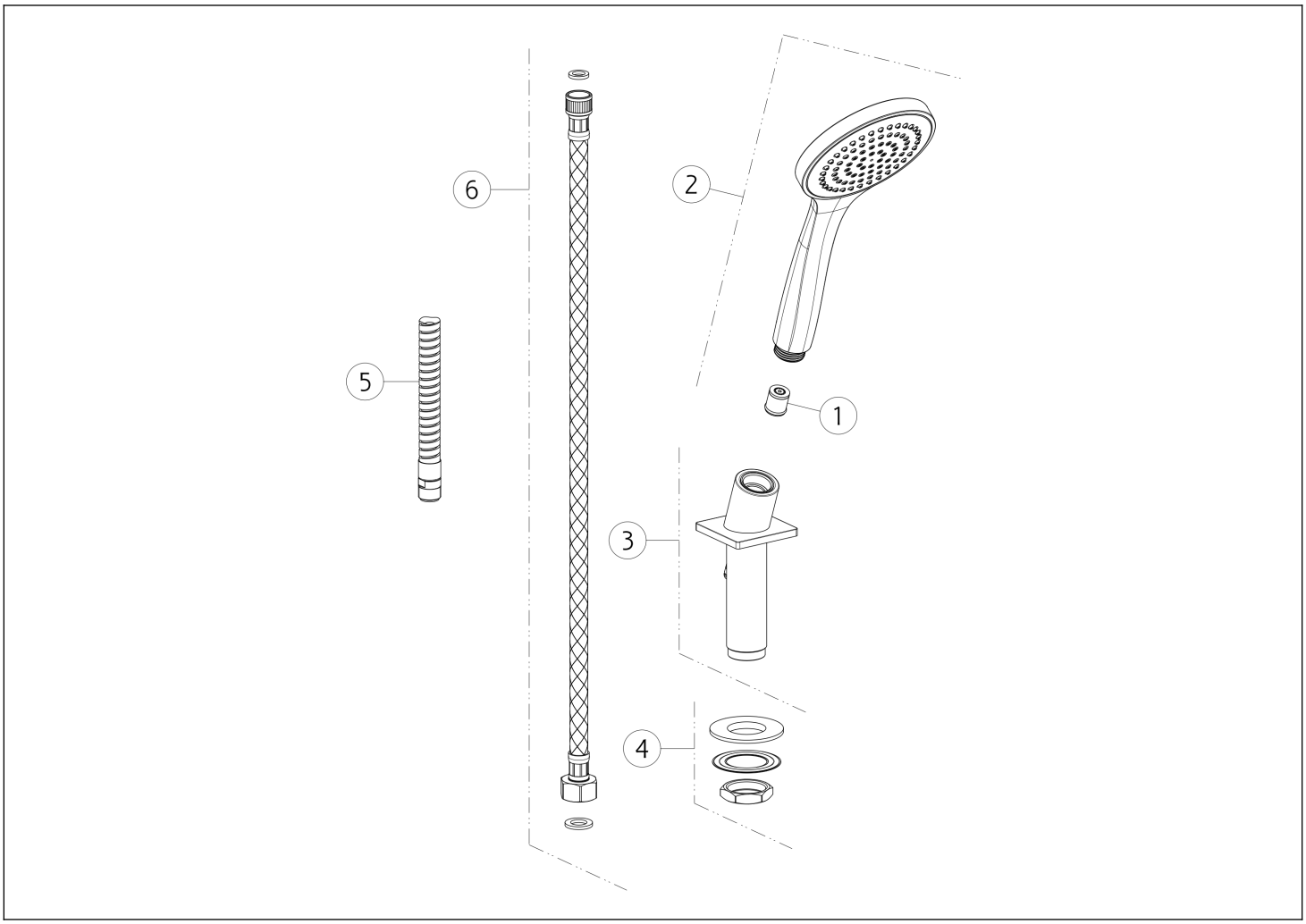

N°	Code	Description
1	SP00900	FLOW REGOLATOR
2	PF47254	HANDSHOWER
3	SP02496	SHOWER HOLDER

N°	Code	Description
4	SP01222	FIXING SET
5	SP01224	HOSE
6	SP01223	HOSE

Gessi S.p.A. Parco Gessi, 13037 Serravalle Sesia (Vercelli) Italy Tel. +39 0163 454111 Fax. +39 0163 453150 - www.gessi.com - gessi@gessi.it This drawing, as required by law, may not be made public or reproduced without the written authorization of GESSI S.p.A. Copyright GESSI S.p.A.