GESSI

59134

GPF5913400000G000

RILIEVO

validity date
≥ 05/2018



External parts for thermostatic mixer, two-way diverter

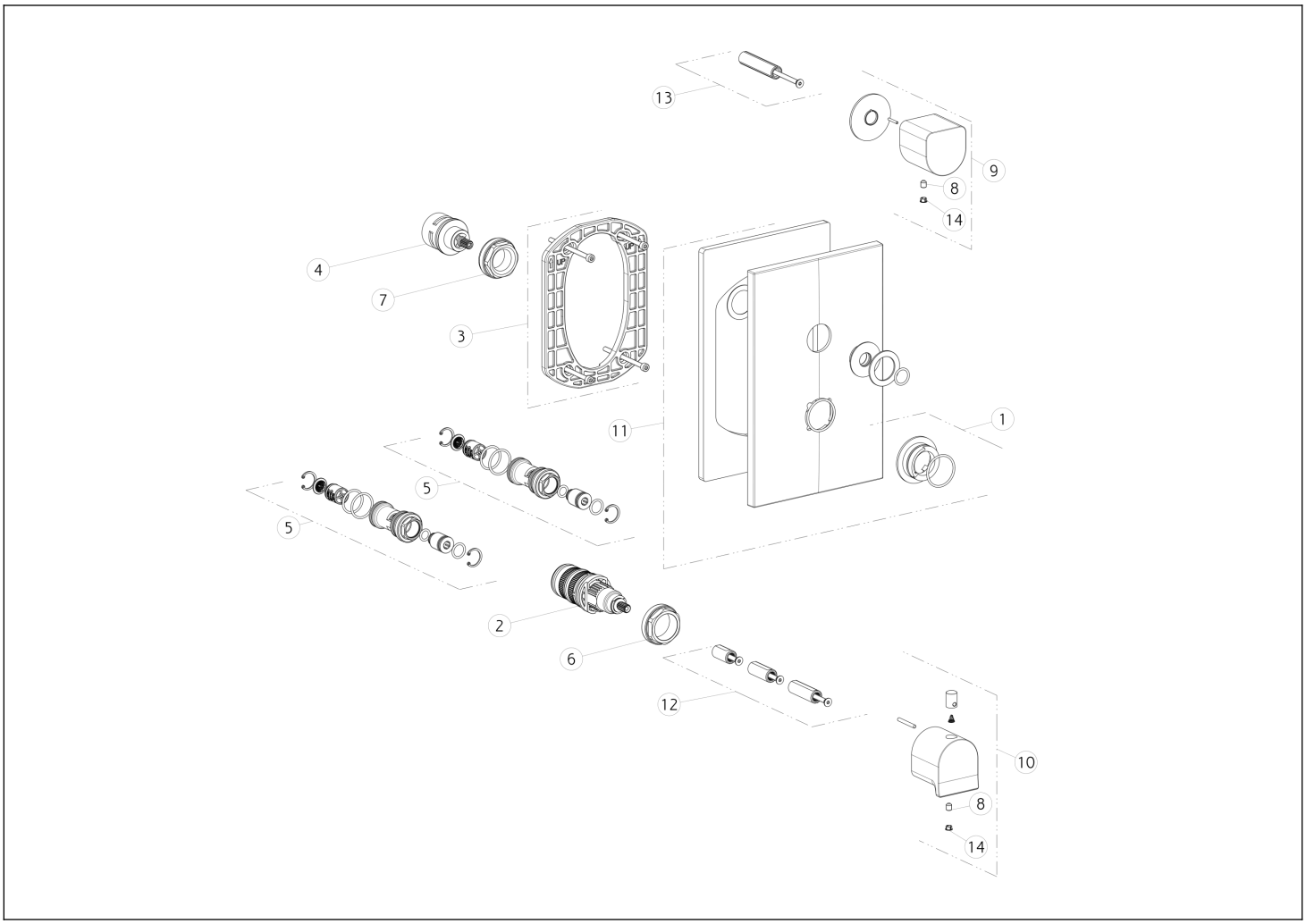

N°	Code	Description
1	SP01739	INDICATOR RING
2	SP01936	THERMOSTATIC CARTRIDGE
3	SP01868	SUB PLATE
4	SP01793	DIVERTER
5	SP01942	FILTER
6	SP01941	FIXING RING NUT
7	SP01945	FIXING RING NUT

N°	Code	Description
8	SP00284	SCREW
9	SP02422	HANDLE
10	SP02423	HANDLE
11	SP02028	FINISHING PLATE
12	SP01940	EXTENSION
13	SP01946	EXTENSION
14	SP00002	SCREW COVER

 This drawing, as required by law, may not be made public or reproduced without the written authorization of GESSI S.p.A. Copyright GESSI S.p.A.