GESSI

59141

GPF5914100000G000

RILIEVO

validity date
≥ 05/2018



External parts for two-way built-in shower mixer with automatic diverter, water outlet, handshower hook, flexible hose and antilimestone handshower

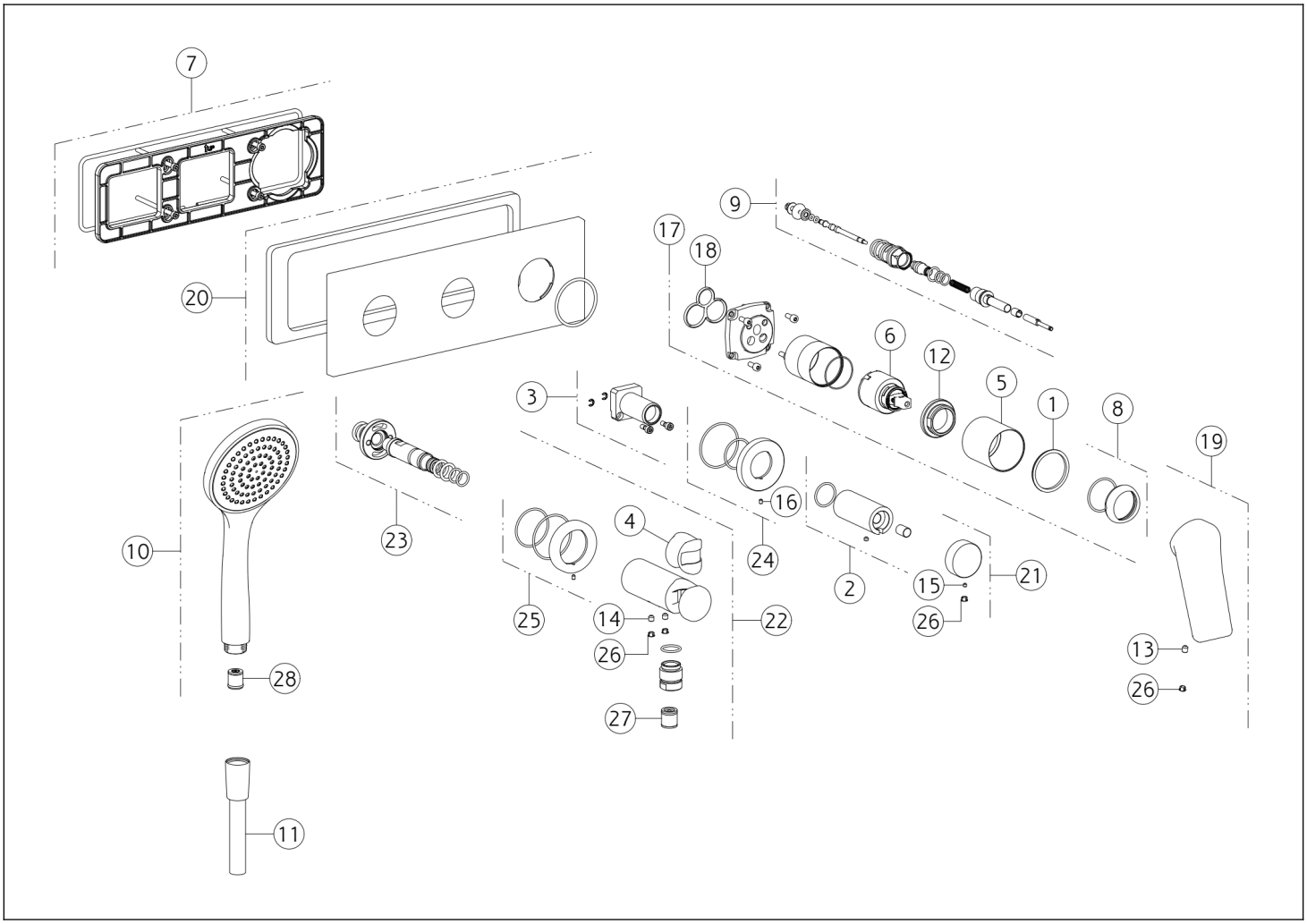

N°	Code	Description
1	SP00545	INDICATOR RING
2	SP00579	BUSH
3	SP00581	BUSH
4	SP01823	BUSH
5	SP03951	FINISHING BUSHING
6	SP00013	CARTRIDGE
7	SP00537	SUB PLATE
8	SP00565	FINISHING RING NUT
9	SP00513	DIVERTER
10	PF47254	HANDSHOWER
11	PF01637	HOSE
12	SP00023	FIXING RING NUT
13	SP00284	SCREW
14	SP00610	SCREW

N°	Code	Description
15	SP03687	SCREW
16	SP03688	SCREW
17	SP00562	CARTRIDGE GROUP
18	SP00506	GASKET
19	SP02381	HANDLE
20	SP00580	FINISHING PLATE
21	SP00111	KNOB
22	SP00515	CONNECTION WATER OUTLET
23	SP00536	NIPPLE
24	SP00514	COVER
25	SP00582	COVER
26	SP00002	SCREW COVER
27	SP00014	NON RETURN VALVE
28	SP00900	FLOW REGOLATOR

Gessi S.p.A. Parco Gessi, 13037 Serravalle Sesia (Vercelli) Italy Tel. +39 0163 454111 Fax. +39 0163 453150 - www.gessi.com - gessi@gessi.it This drawing, as required by law, may not be made public or reproduced without the written authorization of GESSI S.p.A. Copyright GESSI S.p.A.