GESSI

59148

GPF5914800000G000

RILIEVO

validity date
≥ 09/2018



Wall-fixing antilimestone and adjustable headshower

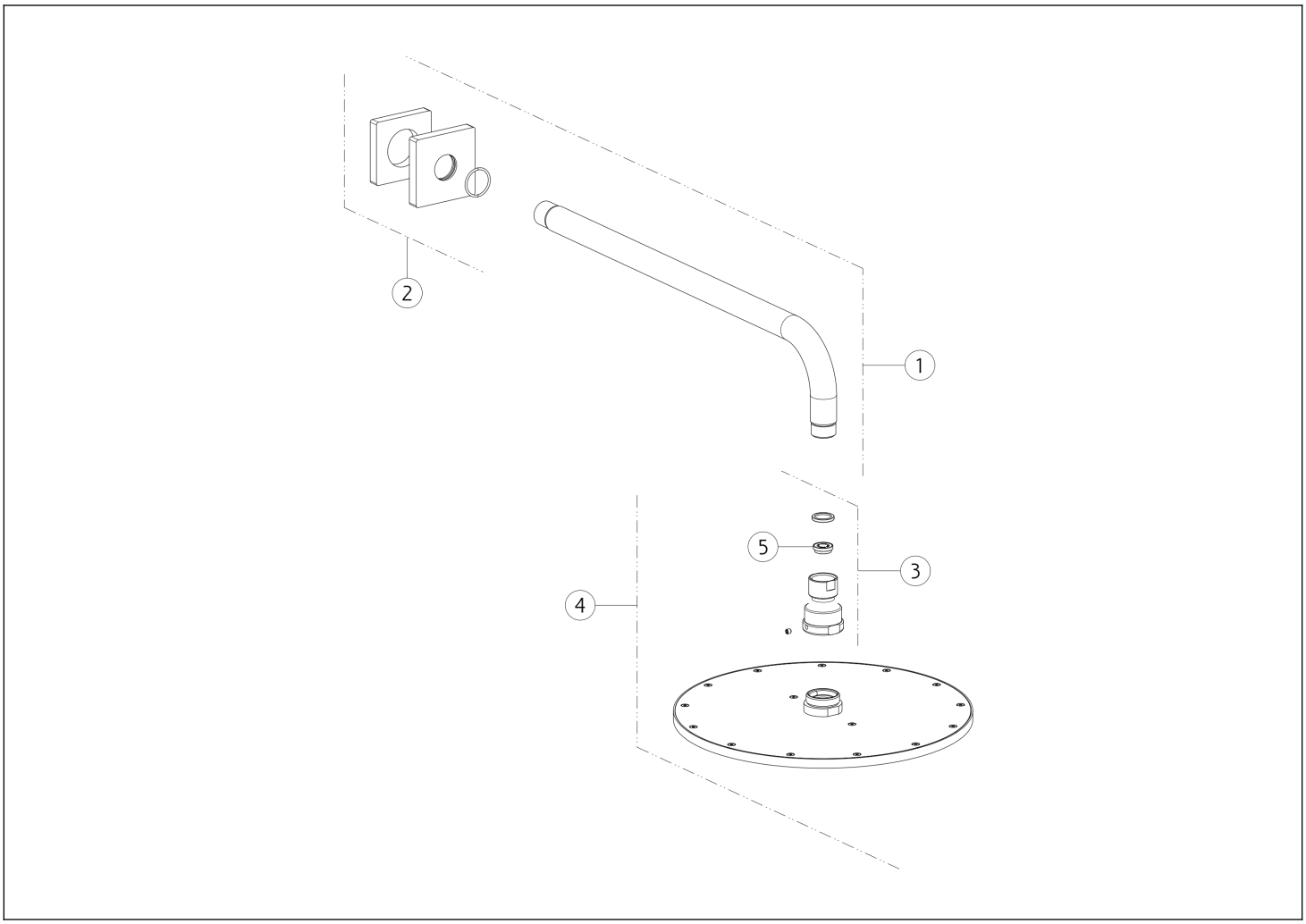

N°	Code	Description
1	SP02425	SHOWER ARM
2	SP02426	COVER
3	SP01896	JOINT

N°	Code	Description
4	SP02138	SHOWERHEAD
5	SP02191	FLOW REGOLATOR

Gessi S.p.A. Parco Gessi, 13037 Serravalle Sesia (Vercelli) Italy Tel. +39 0163 454111 Fax. +39 0163 453150 - www.gessi.com - gessi@gessi.it This drawing, as required by law, may not be made public or reproduced without the written authorization of GESSI S.p.A. Copyright GESSI S.p.A.