GESSI

59157

GPF5915700000G000

RILIEVO

validity date
≥ 12/2018



Fixed handshower hook

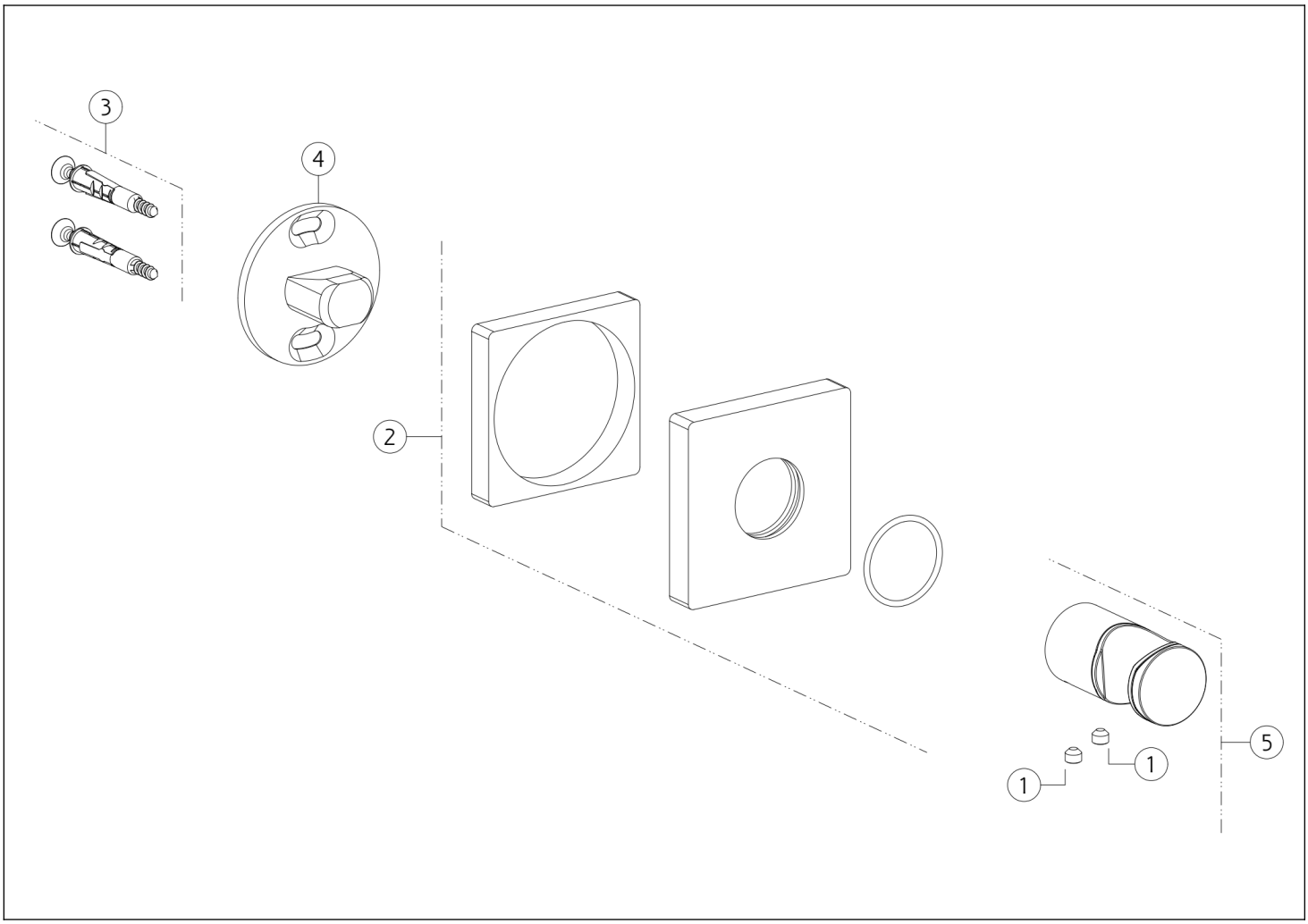

N°	Code	Description
1	SP00137	SCREW
2	SP02548	COVER
3	SP00031	FIXING SET

N°	Code	Description
4	SP00093	WALL SUPPORT
5	SP00094	FIXED HOOK

Gessi S.p.A. Parco Gessi, 13037 Serravalle Sesia (Vercelli) Italy Tel. +39 0163 454111 Fax. +39 0163 453150 - www.gessi.com - gessi@gessi.it This drawing, as required by law, may not be made public or reproduced without the written authorization of GESSI S.p.A. Copyright GESSI S.p.A.