GESSI

59513

GPF59513100000G000

RILIEVO

validity date
≥ 02/2021



Wall-mounted liquid soap dispenser , white

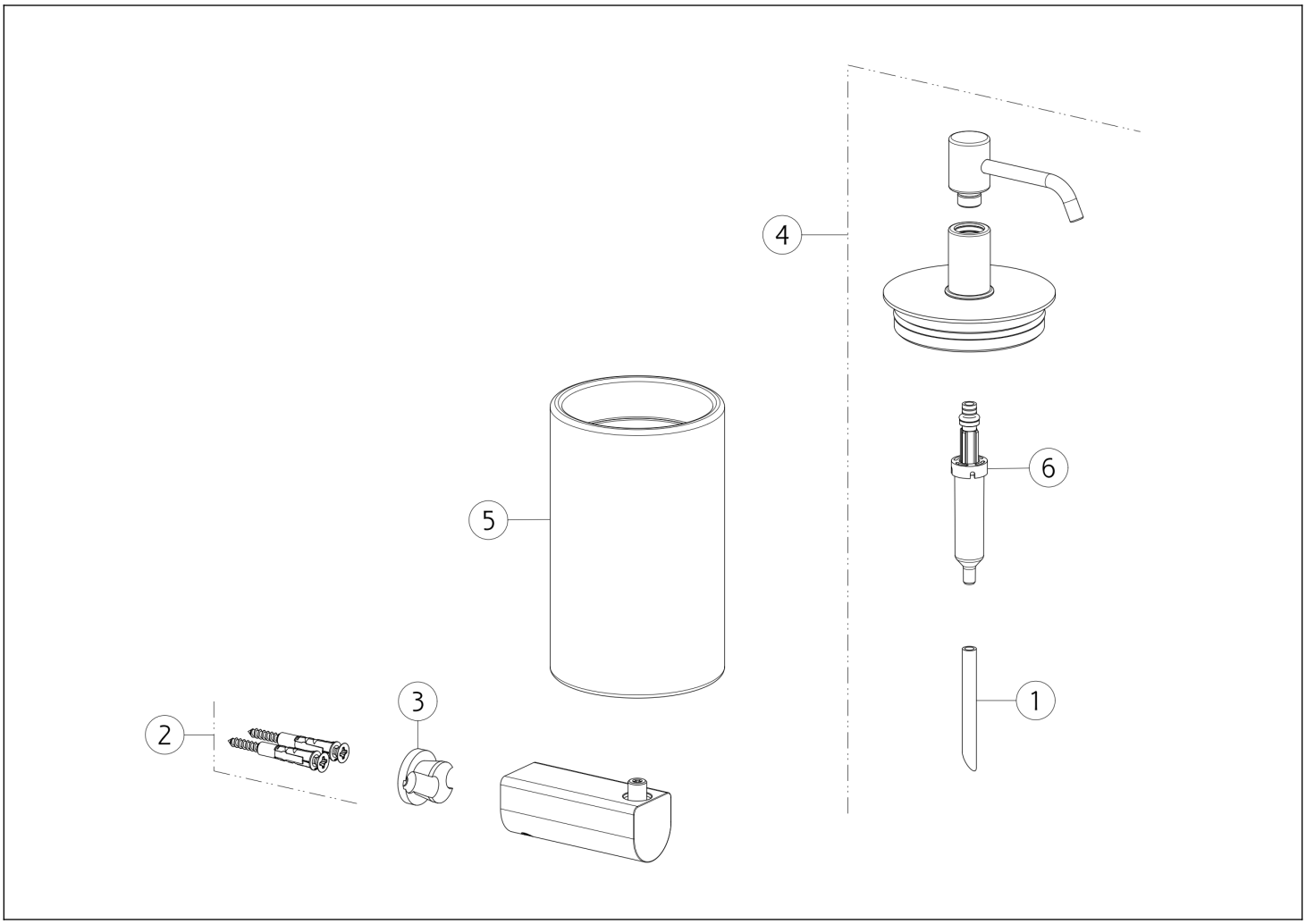

N°	Code	Description
1	SP00198	TUBE
2	SP00031	FIXING KIT
3	SP02606	HOLDER

N°	Code	Description
4	SP02608	DISPENSER
5	SP02331	TUMBLER
6	SP00040	DISPENSER PUMP

Gessi S.p.A. Parco Gessi, 13037 Serravalle Sesia (Vercelli) Italy Tel. +39 0163 454111 Fax. +39 0163 453150 - www.gessi.com - gessi@gessi.it This drawing, as required by law, may not be made public or reproduced without the written authorization of GESSI S.p.A. Copyright GESSI S.p.A.