GESSI

59519

GPF5951920000G000

RILIEVO

validity date
≥ 05/2021



Wall-mounted brush holder, white

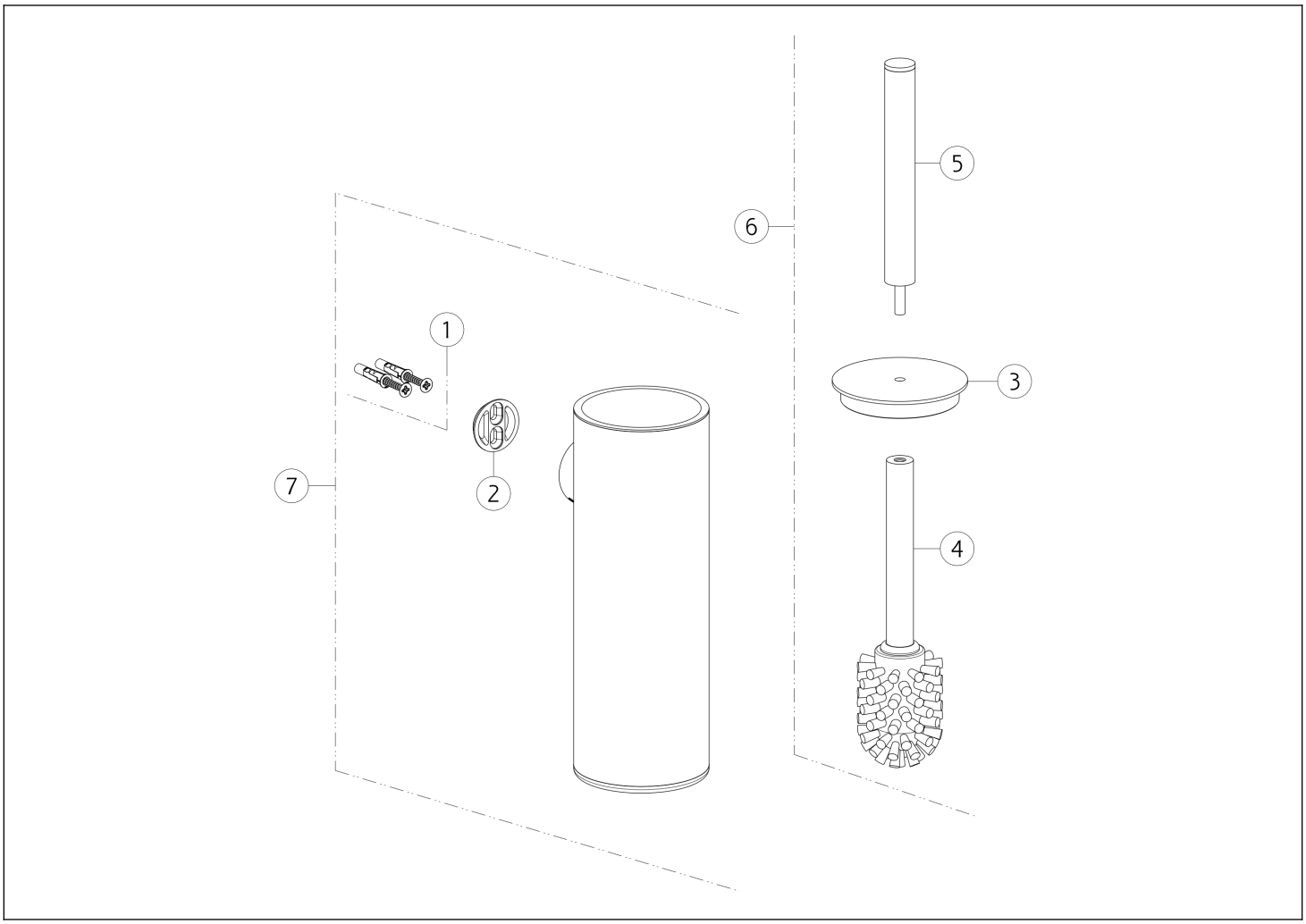

N°	Code	Description
1	SP00031	FIXING SET
2	SP00043	FIXING RING
3	SP02618	DISC
4	SP02546	BRUSH

N°	Code	Description
5	SP02619	HANDLE
6	SP02620	BRUSH WITH HANDLE
7	SP03759	BRUSH HOLDER

Gessi S.p.A. Parco Gessi, 13037 Serravalle Sesia (Vercelli) Italy Tel. +39 0163 454111 Fax. +39 0163 453150 - www.gessi.com - gessi@gessi.it This drawing, as required by law, may not be made public or reproduced without the written authorization of GESSI S.p.A. Copyright GESSI S.p.A.