GESSI

60022

GPF60022000000G000

GESSI 316

validity date
≥ 10/2021



Single-lever sink mixer with pull-out dual-jet handshower.

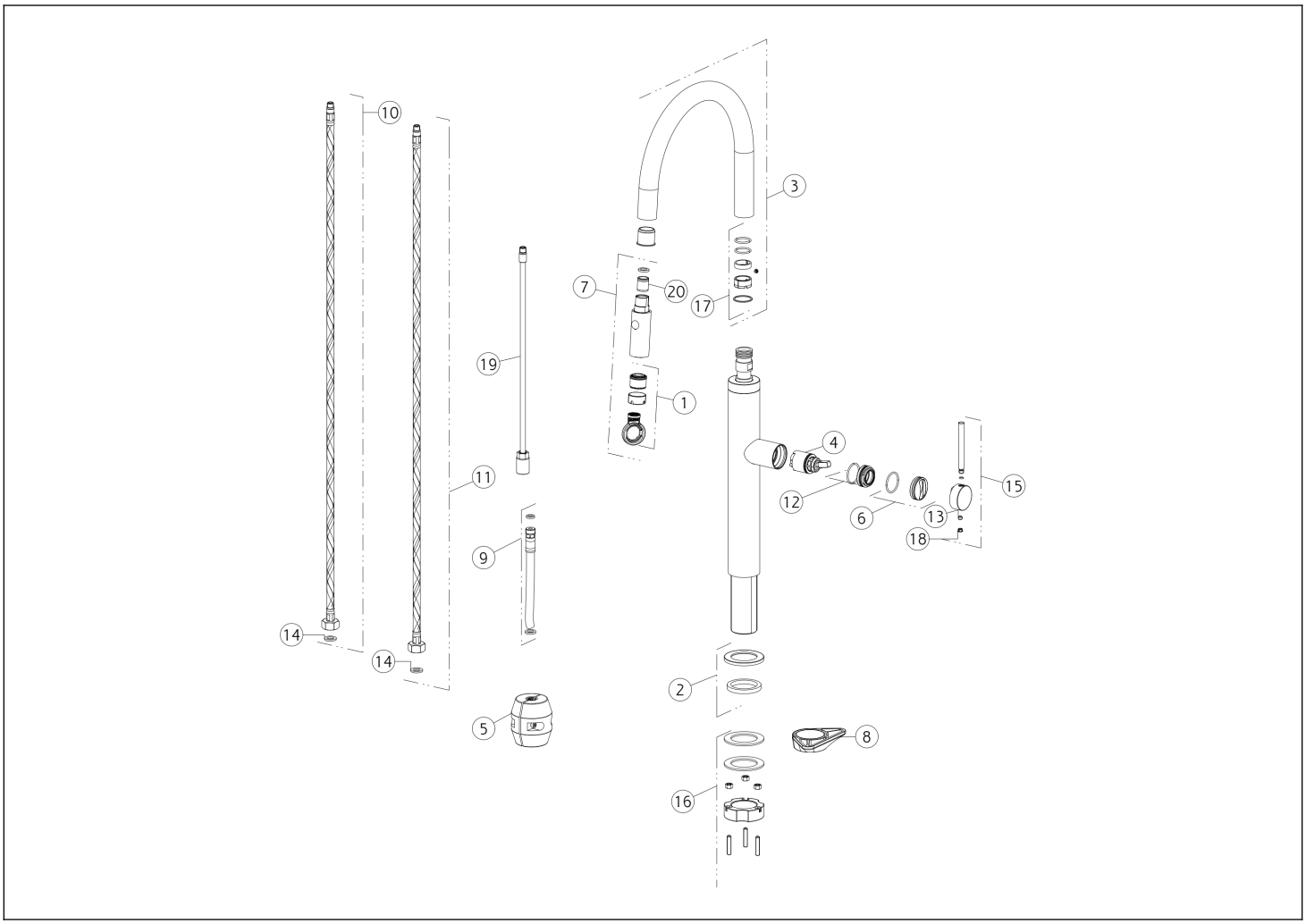

N°	Code	Description
1	SP00337	AERATOR
2	SP01702	BASE PLATE
3	SP03598	COMPLETE SPOUT
4	SP02288	CARTRIDGE
5	SP00680	COUNTERWEIGHT
6	SP01786	FINISHING RING NUT
7	SP03596	HANDSHOWER
8	SP00329	TRIANGULAR FLANGE
9	SP03532	HOSE
10	SP01286	BLUE SUPPLY HOSE

N°	Code	Description
11	SP01287	RED SUPPLY HOSE
12	SP01278	FIXING RING NUT
13	SP00137	GRUB SCREW
14	SP00064	GASKET
15	SP01785	HANDLE
16	SP01703	FIXING KIT
17	SP00906	GASKETS AND ANTI-FRICTION RINGS
18	SP00002	SCREW COVER
19	SP03597	TUBE
20	SP00336	NON RETURN VALVE

Gessi S.p.A. Parco Gessi, 13037 Serravalle Sesia (Vercelli) Italy Tel. +39 0163 454111 Fax. +39 0163 453150 - www.gessi.com - gessi@gessi.it This drawing, as required by law, may not be made public or reproduced without the written authorization of GESSI S.p.A. Copyright GESSI S.p.A.