GESSI

# 60024

GPF6002400000G000

## GESSI 316

validity date
≥ 11/2021



Single-lever sink mixer with pull-out dual-jet handshower. MECCANICA.

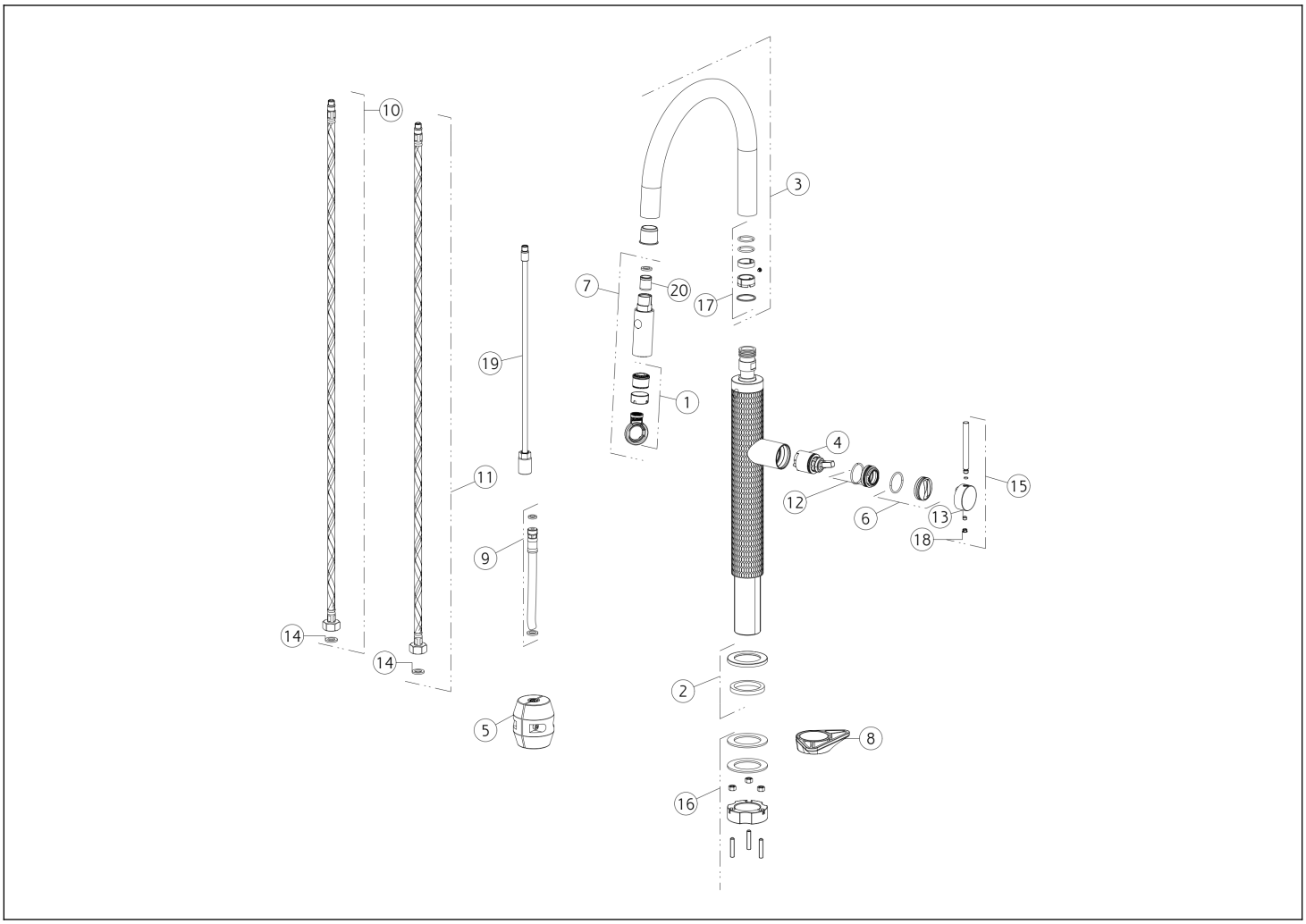


| N° | Code | Description |
|---|---|---|
| 1 | SP00337 | AERATOR |
| 2 | SP01702 | BASE PLATE |
| 3 | SP03598 | COMPLETE SPOUT |
| 4 | SP02288 | CARTRIDGE |
| 5 | SP00680 | COUNTERWEIGHT |
| 6 | SP01786 | FINISHING RING NUT |
| 7 | SP03596 | HANDSHOWER |
| 8 | SP00329 | TRIANGULAR FLANGE |
| 9 | SP03532 | HOSE |
| 10 | SP01286 | BLUE SUPPLY HOSE |

| N° | Code | Description |
|---|---|---|
| 11 | SP01287 | RED SUPPLY HOSE |
| 12 | SP01278 | FIXING RING NUT |
| 13 | SP00137 | GRUB SCREW |
| 14 | SP00064 | GASKET |
| 15 | SP01785 | HANDLE |
| 16 | SP01703 | FIXING KIT |
| 17 | SP00906 | GASKETS AND ANTI-FRICTION RINGS |
| 18 | SP00002 | SCREW COVER |
| 19 | SP03597 | TUBE |
| 20 | SP00336 | NON RETURN VALVE |

Gessi S.p.A. Parco Gessi, 13037 Serravalle Sesia (Vercelli) Italy Tel. +39 0163 454111 Fax. +39 0163 453150 - www.gessi.com - gessi@gessi.it This drawing, as required by law, may not be made public or reproduced without the written authorization of GESSI S.p.A. Copyright GESSI S.p.A.