GESSI

60429

GPF6042900000G000

INEDITO

validity date
≥ 11/2019



Semi-professional single-lever swivel sink mixer with pull-out dual-jet handshower.

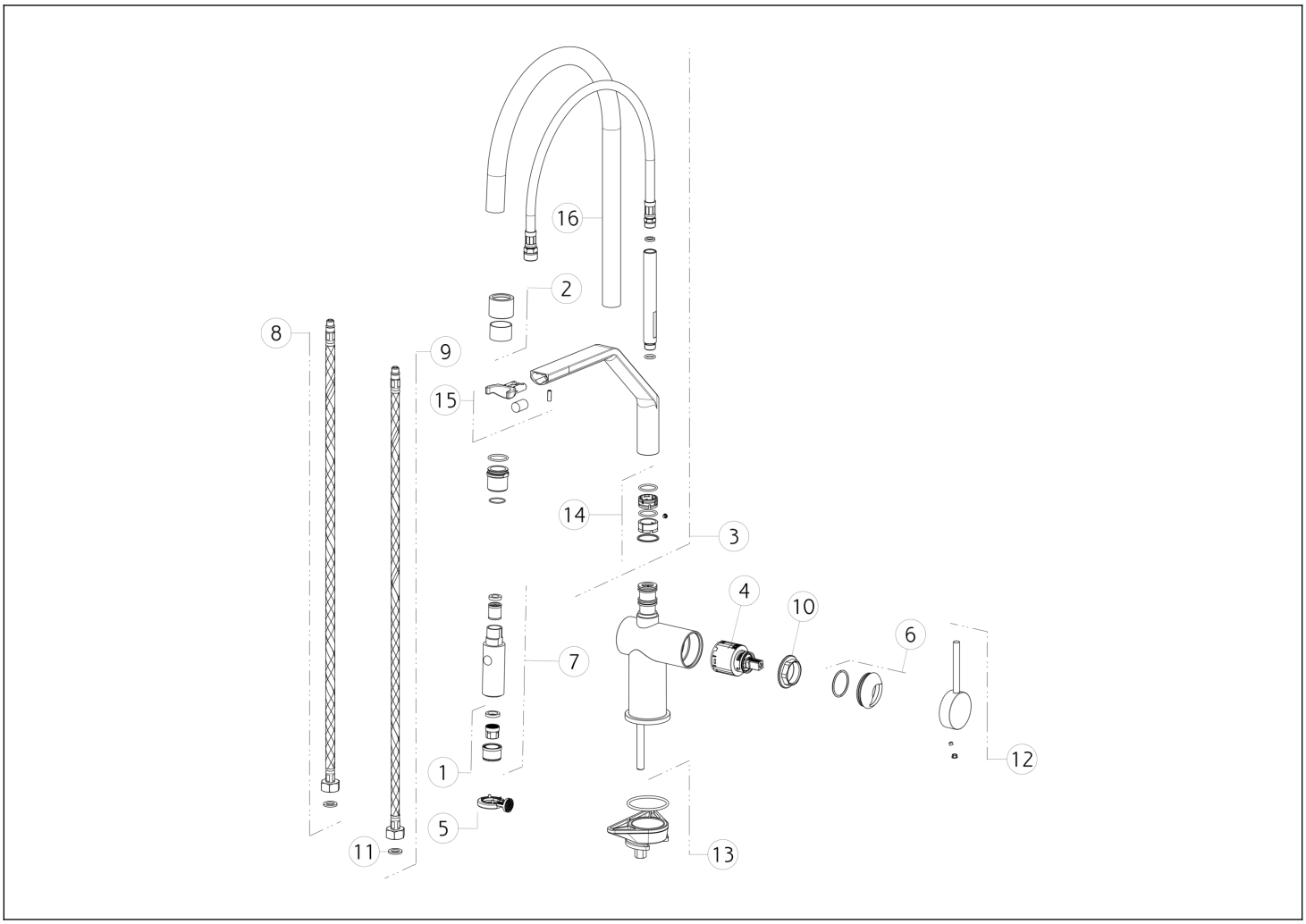

N°	Code	Description
1	SP00337	AERATOR
2	SP02589	BUSH
3	SP02590	COMPLETE SPOUT
4	SP00902	CARTRIDGE
5	SP00359	KEY
6	SP03280	FINISHING RING NUT
7	SP02587	HANDSHOWER
8	SP01591	BLUE SUPPLY HOSE

N°	Code	Description
9	SP01590	RED SUPPLY HOSE
10	SP00406	FIXING RING NUT
11	SP00064	GASKET
12	SP02860	HANDLE
13	SP02917	FIXING KIT
14	SP02570	GASKETS AND ANTI-FRICTION RINGS
15	SP02588	HOLDER
16	SP02527	PIPE

Gessi S.p.A. Parco Gessi, 13037 Serravalle Sesia (Vercelli) Italy Tel. +39 0163 454111 Fax. +39 0163 453150 - www.gessi.com - gessi@gessi.it This drawing, as required by law, may not be made public or reproduced without the written authorization of GESSI S.p.A. Copyright GESSI S.p.A.