GESSI

60471

validity date
≥ 01/2020



GPF60471000000G000

INEDITO

Single-lever swivel sink mixer.

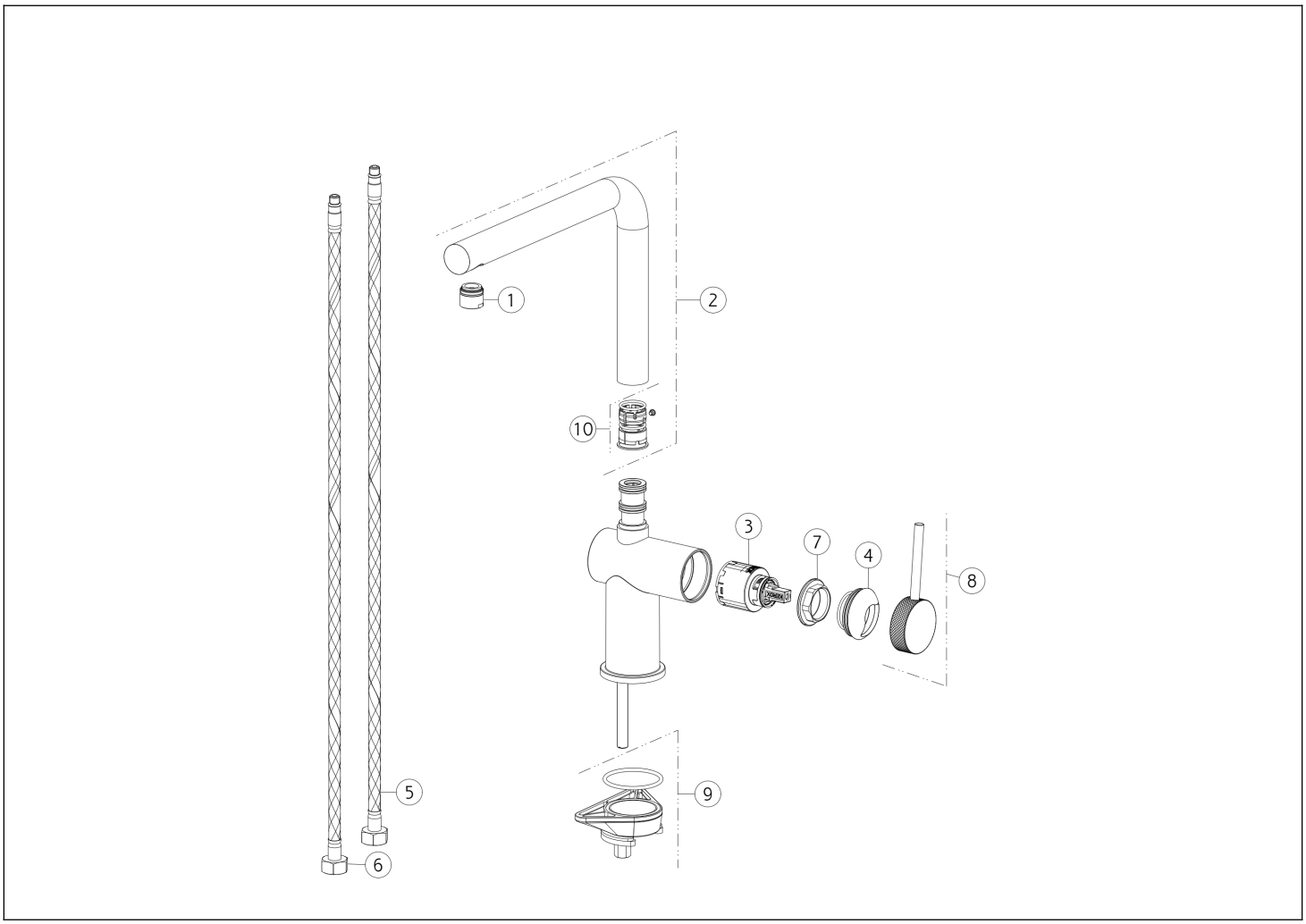

N°	Code	Description
1	SP00437	COMPLETE AERATOR
2	SP02579	COMPLETE SPOUT
3	SP00902	CARTRIDGE
4	SP03280	FINISHING RING NUT
5	SP01591	BLU SUPPLY HOSE

N°	Code	Description
6	SP01590	RED SUPPLY HOSE
7	SP00406	FIXING RING NUT
8	SP02400	HANDLE
9	SP02917	FIXING SET
10	SP02570	GASKETS AND ANTI-FRICTION RINGS

Gessi S.p.A. Parco Gessi, 13037 Serravalle Sesia (Vercelli) Italy Tel. +39 0163 454111 Fax. +39 0163 453150 - www.gessi.com - gessi@gessi.it This drawing, as required by law, may not be made public or reproduced without the written authorization of GESSI S.p.A. Copyright GESSI S.p.A.