GESSI 63079

GPF6307900000G000

HI-FI

validity date
≥ 06/2020

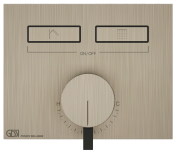

External parts for single-lever mixer for two separate functions, with push-button on/off controls.

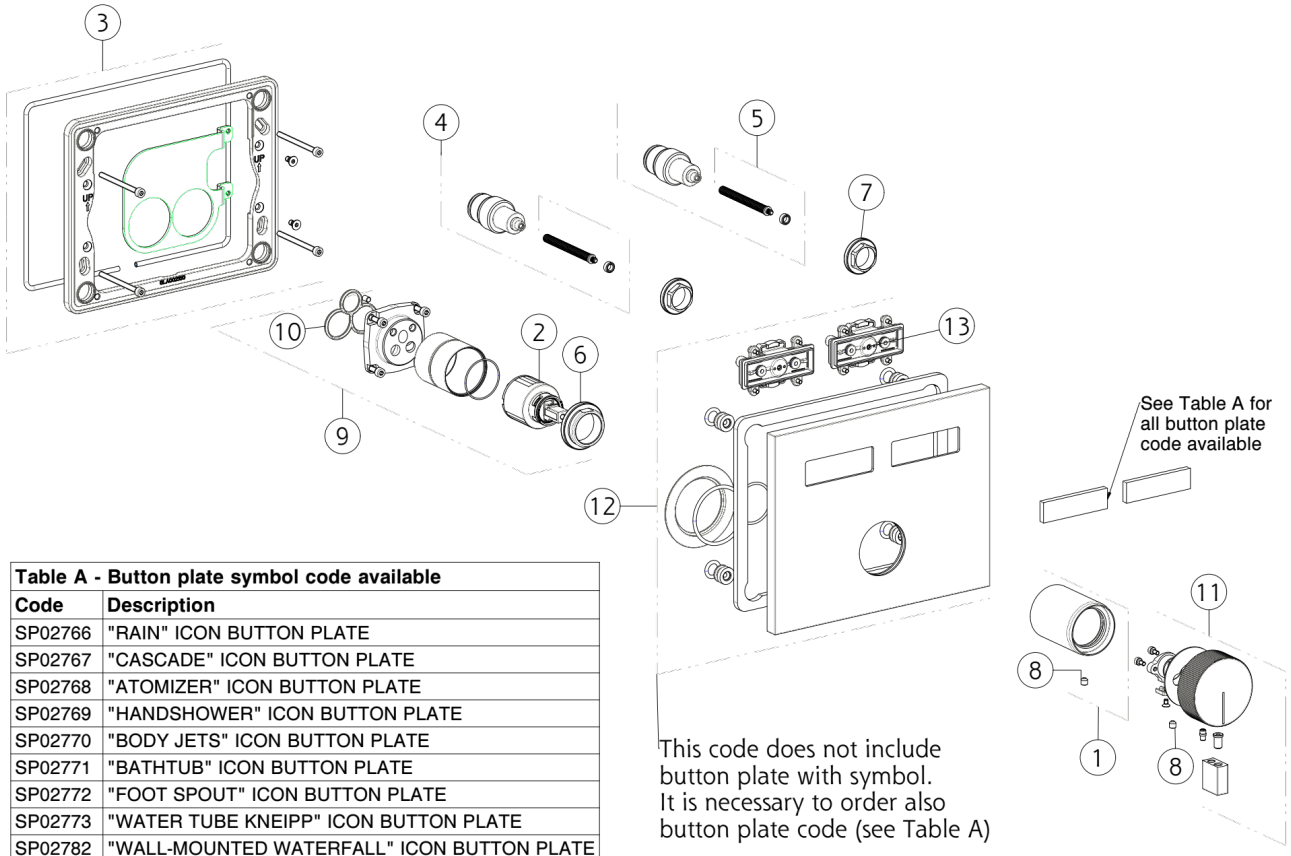

Table A - Button plate symbol code available	
Code	**Description**
SP02766	"RAIN" ICON BUTTON PLATE
SP02767	"CASCADE" ICON BUTTON PLATE
SP02768	"ATOMIZER" ICON BUTTON PLATE
SP02769	"HANDSHOWER" ICON BUTTON PLATE
SP02770	"BODY JETS" ICON BUTTON PLATE
SP02771	"BATHTUB" ICON BUTTON PLATE
SP02772	"FOOT SPOUT" ICON BUTTON PLATE
SP02773	"WATER TUBE KNEIPP" ICON BUTTON PLATE
SP02782	"WALL-MOUNTED WATERFALL" ICON BUTTON PLATE
SP02783	"WALL-MOUNTED ATOMIZER" ICON BUTTON PLATE

N°	Code	Description
1	SP02897	FINISHING BUSHING
2	SP01605	CARTRIDGE
3	SP02895	SUB PLATE
4	SP02844	PUSH-BUTTON CARTRIDGE
5	SP03364	SPACER
6	SP00023	FIXING RING NUT
7	SP02845	FIXING RING NUT

N°	Code	Description
8	SP00610	SCREW
9	SP02899	CARTRIDGE GROUP
10	SP00506	GASKET
11	SP02898	HANDLE
12	SP02900	FINISHING PLATE
13	SP02850	PUSH BUTTON

 This drawing, as required by law, may not be made public or reproduced without the written authorization of GESSI S.p.A. Copyright GESSI S.p.A.