GESSI

63099

GPF6309900000G000

HI-FI

validity date
≥ 02/2020



Magnetic shower set with water outlet, 1,50 m Cromalux flexible hose and antilimestone handshower

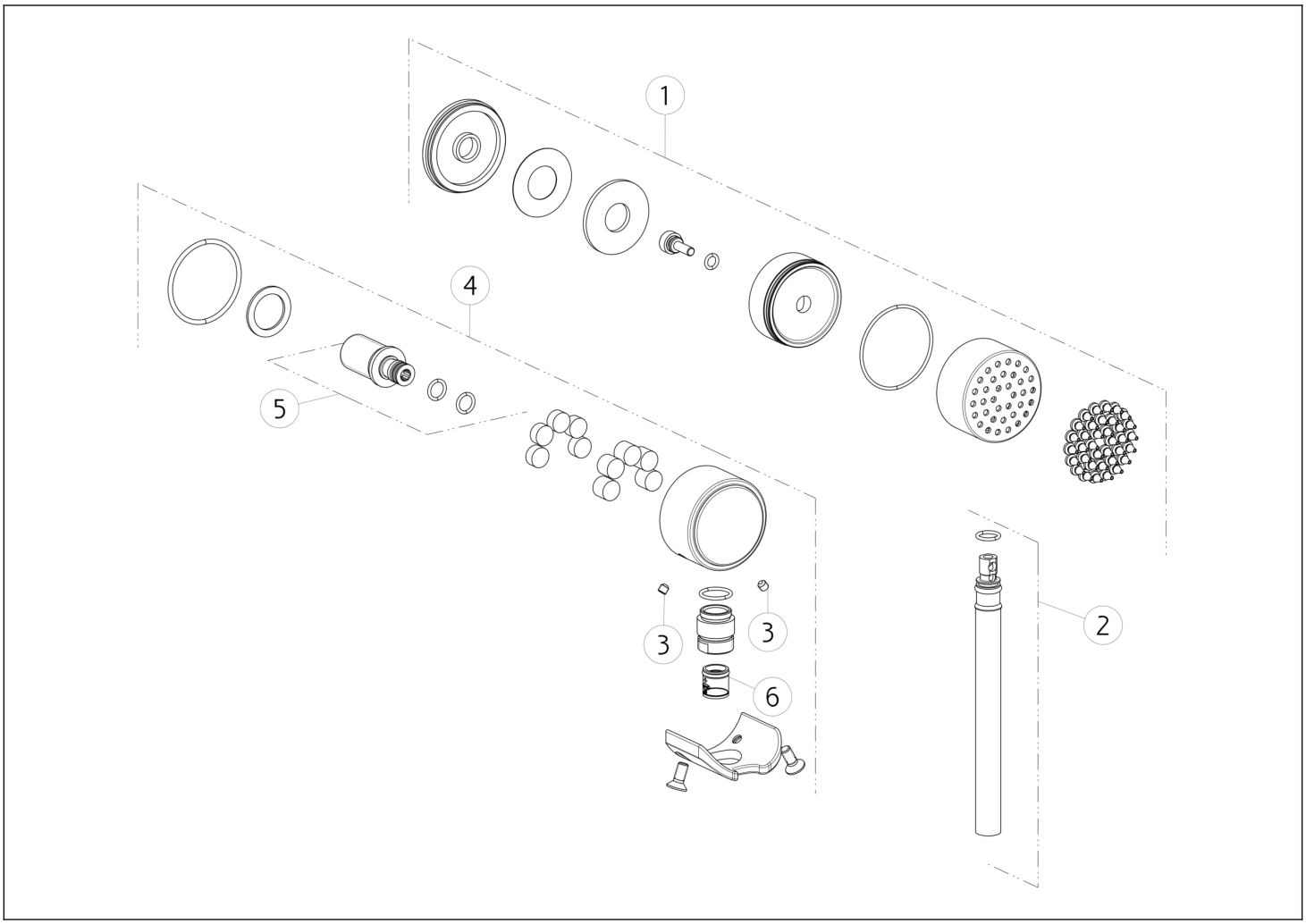

N°	Code	Description
1	SP02907	HANDSHOWER
2	SP02906	HOSE
3	SP00610	SCREW

N°	Code	Description
4	SP02905	CONNECTION WATER OUTLET
5	SP01816	NIPPLE
6	SP01634	FLOW REGOLATOR

Gessi S.p.A. Parco Gessi, 13037 Serravalle Sesia (Vercelli) Italy Tel. +39 0163 454111 Fax. +39 0163 453150 - www.gessi.com - gessi@gessi.it This drawing, as required by law, may not be made public or reproduced without the written authorization of GESSI S.p.A. Copyright GESSI S.p.A.