GESSI

63141

GPF6314100000G000

validity date
≥ 05/2025



INGRANAGGIO

External part for 2-outlet thermostat mixer

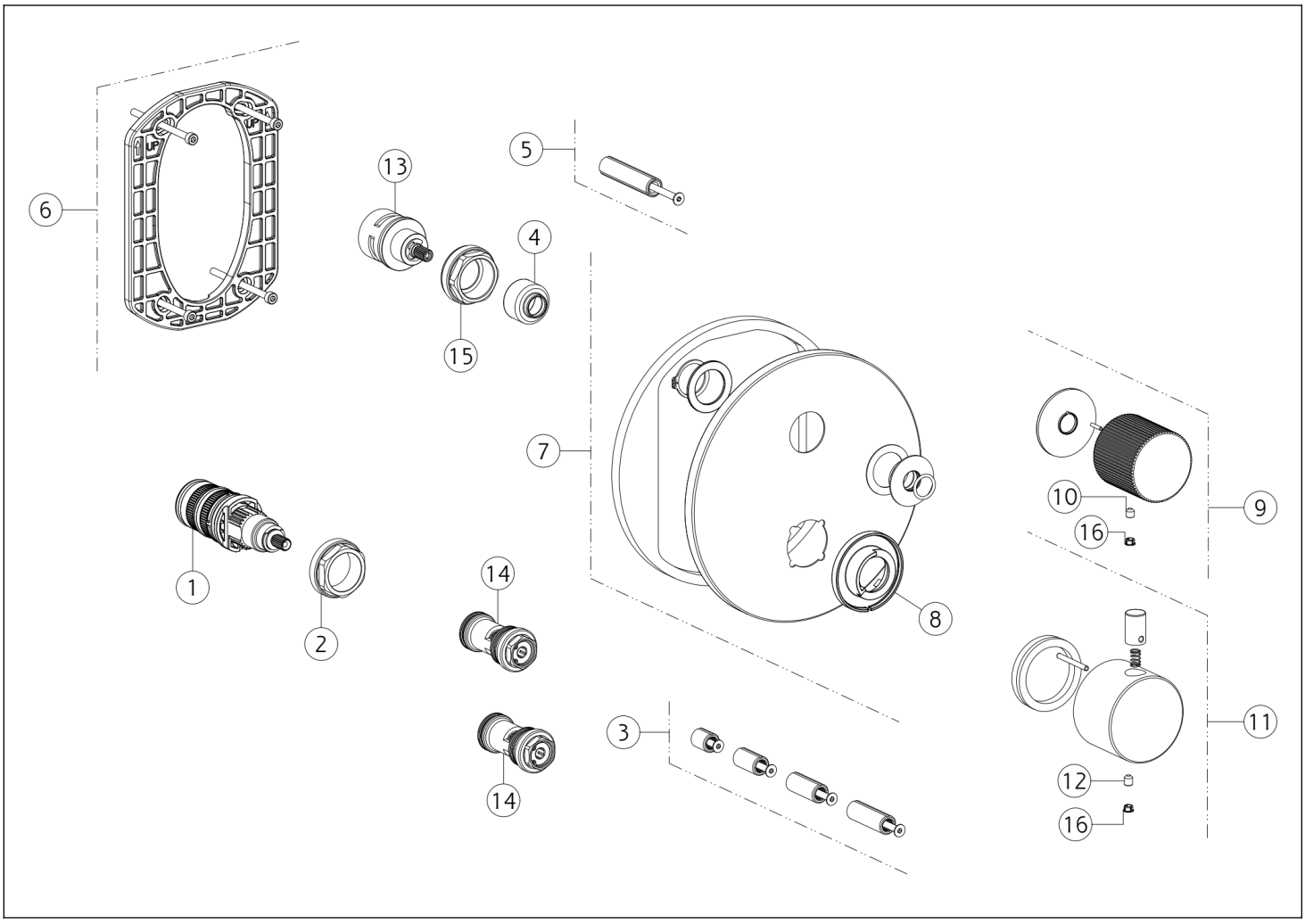

N°	Code	Description
1	SP01936	THERMOSTATIC CARTRIDGE
2	SP01941	FIXING RING NUT
3	SP01931	EXTENSION
4	SP03211	BUSH
5	SP01946	EXTENSION
6	SP01868	SUB PLATE
7	SP04950	FINISHING PLATE
8	SP02846	INDICATOR RING

N°	Code	Description
9	SP05233	HANDLE
10	SP00610	SCREW
11	SP04877	HANDLE
12	SP00284	SCREW
13	SP01793	DIVERTER
14	SP01942	FILTER
15	SP01945	FIXING RING NUT
16	SP00002	SCREW COVER

Gessi S.p.A. Parco Gessi, 13037 Serravalle Sesia (Vercelli) Italy Tel. +39 0163 454111 Fax. +39 0163 453150 - www.gessi.com - gessi@gessi.it This drawing, as required by law, may not be made public or reproduced without the written authorization of GESSI S.p.A. Copyright GESSI S.p.A.