GESSI

63303

GPF63303000000G000

ANELLO

validity date
≥ 02/2021



Basin mixer high , short spout, flexible connections, with waste

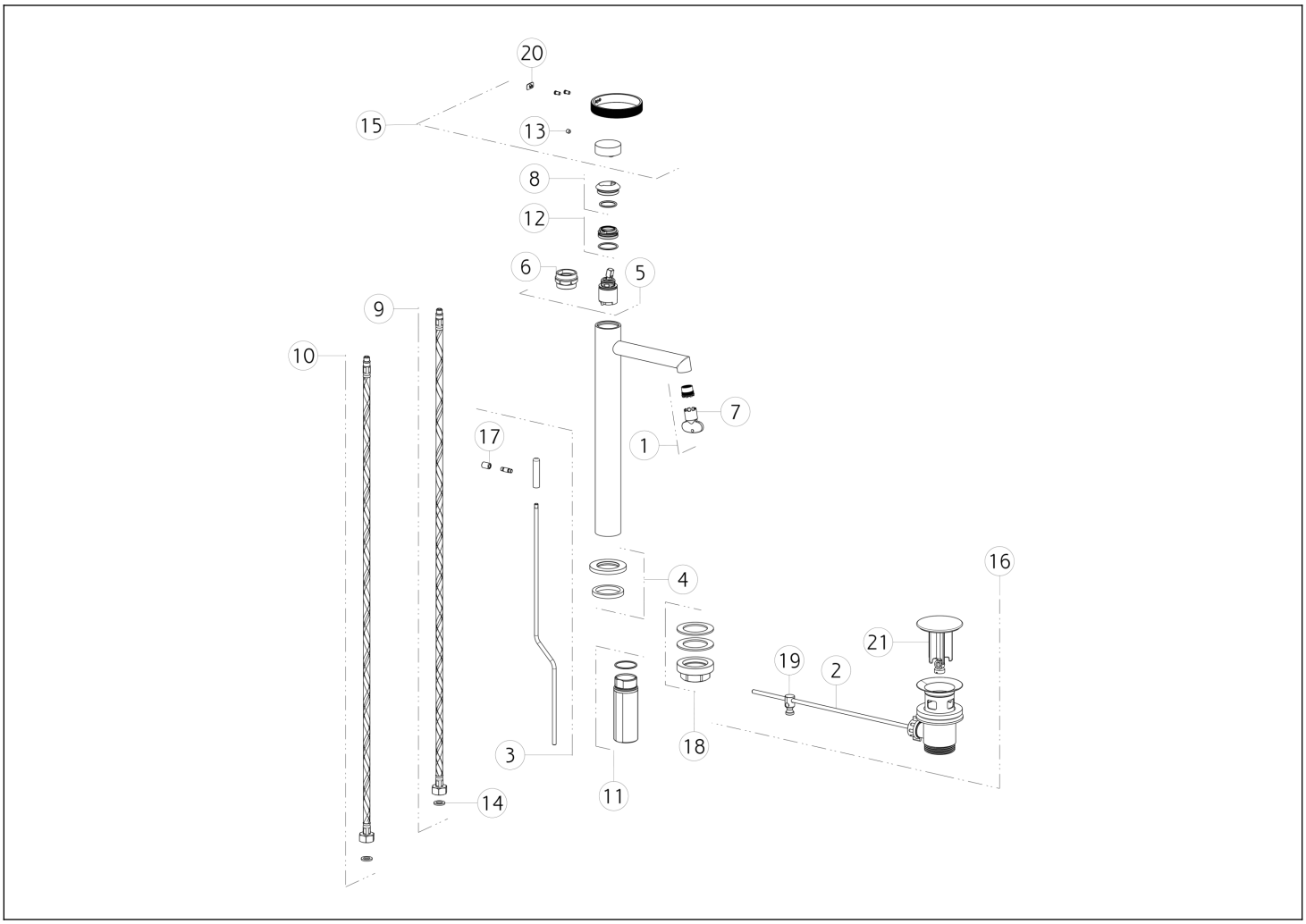

N°	Code	Description
1	SP01608	AERATOR
2	SP00218	ROD
3	SP03268	POP-UP WASTE ROD
4	SP03267	BASE PLATE
5	SP01277	CARTRIDGE
6	SP00216	KEY
7	SP00504	KEY
8	SP03266	FINISHING RING NUT
9	SP01286	BLUE SUPPLY HOSE
10	SP01287	RED SUPPLY HOSE
11	SP02372	SHANK

N°	Code	Description
12	SP01278	FIXING RING NUT
13	SP00610	GRUB SCREW
14	SP00064	GASKET
15	SP03164	HANDLE
16	PF29263	BASIN WASTE
17	SP00927	KNOB
18	SP02370	FIXING KIT
19	SP00219	JOINT
20	SP03180	SCREW COVER
21	SP00772	WASTE COVER CAP

 This drawing, as required by law, may not be made public or reproduced without the written authorization of GESSI S.p.A. Copyright GESSI S.p.A.