GESSI

63307

GPF63307000000G000

ANELLO

validity date
≥ 01/2021



Bidet mixer with flexible connections

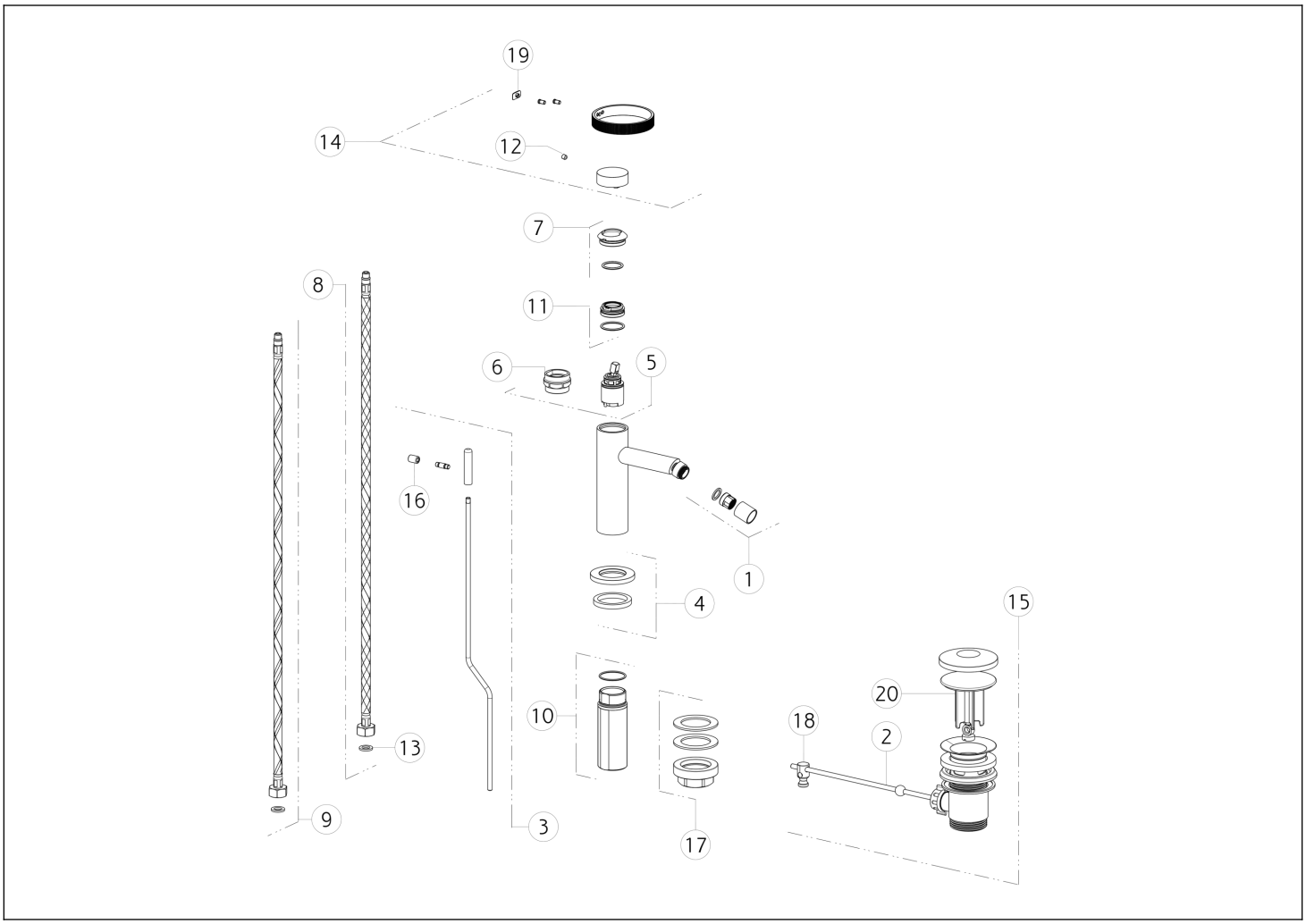

N°	Code	Description
1	SP02280	AERATOR
2	SP00220	ROD
3	SP03268	POP-UP WASTE ROD
4	SP03267	BASE PLATE
5	SP01277	CARTRIDGE
6	SP00216	KEY
7	SP03266	FINISHING RING NUT
8	SP01591	BLUE SUPPLY HOSE
9	SP01590	RED SUPPLY HOSE
10	SP02372	SHANK

N°	Code	Description
11	SP01278	FIXING RING NUT
12	SP00610	GRUB SCREW
13	SP00064	GASKET
14	SP03164	HANDLE
15	PF29264	BASIN WASTE
16	SP00927	KNOB
17	SP02370	FIXING KIT
18	SP00219	JOINT
19	SP03180	SCREW COVER
20	SP00772	WASTE COVER CAP

Gessi S.p.A. Parco Gessi, 13037 Serravalle Sesia (Vercelli) Italy Tel. +39 0163 454111 Fax. +39 0163 453150 - www.gessi.com - gessi@gessi.it This drawing, as required by law, may not be made public or reproduced without the written authorization of GESSI S.p.A. Copyright GESSI S.p.A.