GESSI

63315

GPF6331500000G000

ANELLO

validity date
≥ 02/2021



Basin mixer, flexible connections, without waste

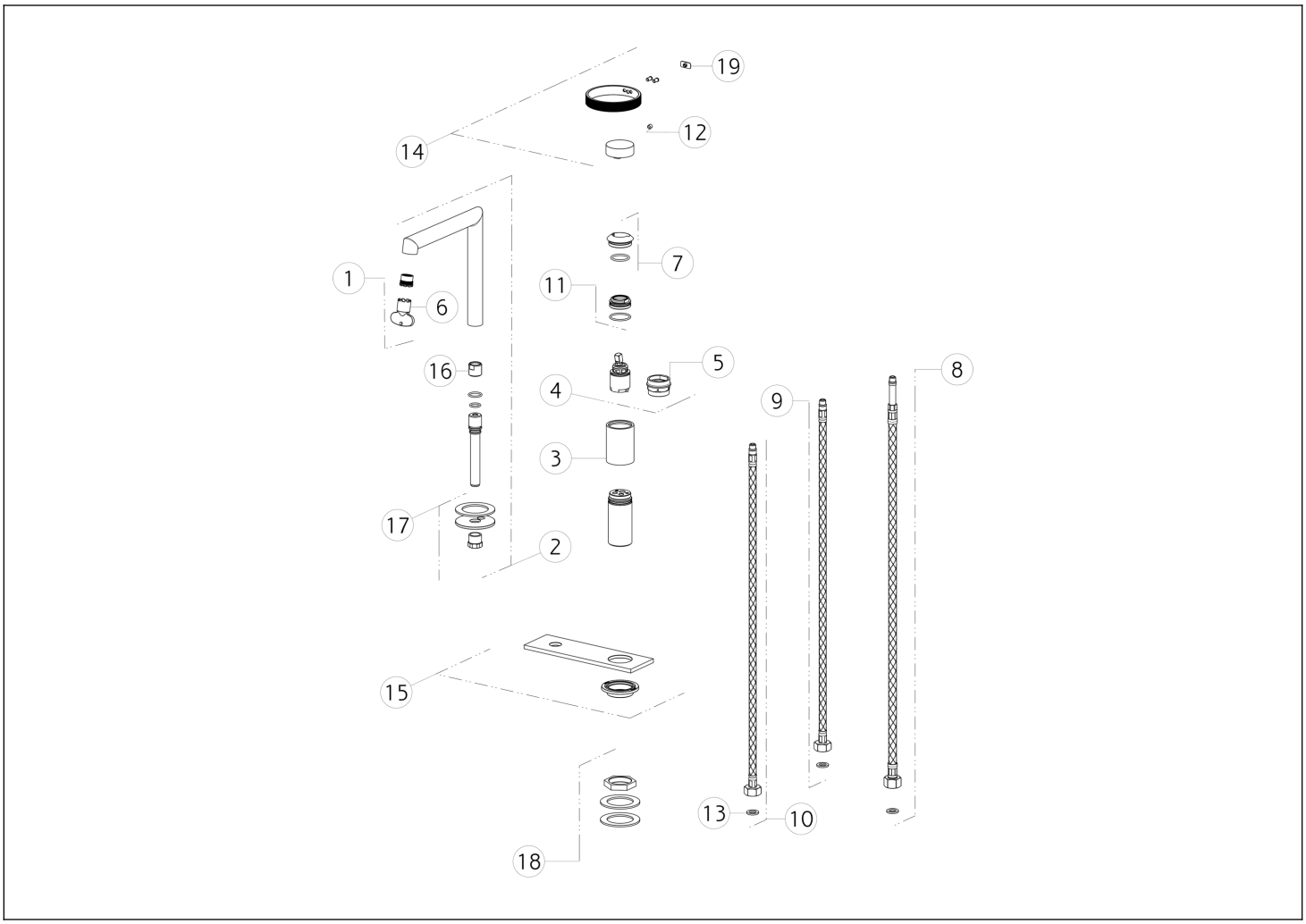

N°	Code	Description
1	SP01608	AERATOR
2	SP03301	COMPLETE SPOUT
3	SP03311	CARTRIDGE RETAINING BUSH
4	SP01277	CARTRIDGE
5	SP00216	KEY
6	SP00504	KEY
7	SP03266	FINISHING RING NUT
8	SP00987	HOSE
9	SP01284	BLUE SUPPLY HOSE
10	SP01285	RED SUPPLY HOSE

N°	Code	Description
11	SP01278	FIXING RING NUT
12	SP00610	GRUB SCREW
13	SP00064	GASKET
14	SP03164	HANDLE
15	SP03309	FINISHING PLATE
16	SP03312	NIPPLE
17	SP03310	FIXING KIT
18	SP03313	FIXING KIT
19	SP03180	SCREW COVER

Gessi S.p.A. Parco Gessi, 13037 Serravalle Sesia (Vercelli) Italy Tel. +39 0163 454111 Fax. +39 0163 453150 - www.gessi.com - gessi@gessi.it This drawing, as required by law, may not be made public or reproduced without the written authorization of GESSI S.p.A. Copyright GESSI S.p.A.