GESSI

63354

GPF6335400000G000

ANELLO

validity date
≥ 06/2026



Wall-mounted anti-limestone showerhead

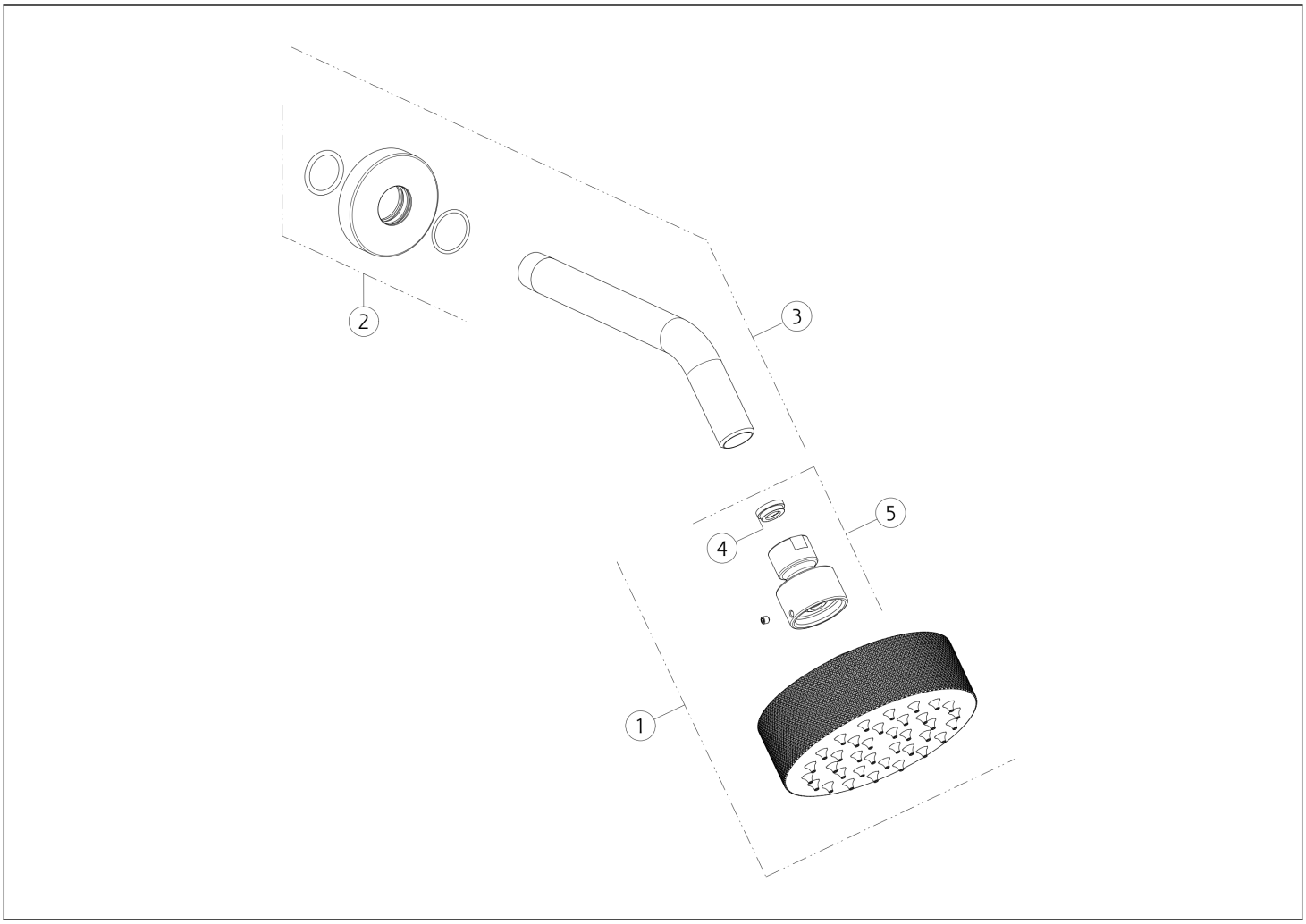

N°	Code	Description
1	SP05074	SHOWERHEAD
2	SP05065	COVER
3	SP04774	SHOWER ARM

N°	Code	Description
4	SP02191	FLOW REGOLATOR
5	SP00244	JOINT

Gessi S.p.A. Parco Gessi, 13037 Serravalle Sesia (Vercelli) Italy Tel. +39 0163 454111 Fax. +39 0163 453150 - www.gessi.com - gessi@gessi.it This drawing, as required by law, may not be made public or reproduced without the written authorization of GESSI S.p.A. Copyright GESSI S.p.A.