GESSI

63356

GPF6335600000G000

ANELLO

validity date
≥ 06/2026



Multifunctional adjustable wall-mounted anti-limescale shower head

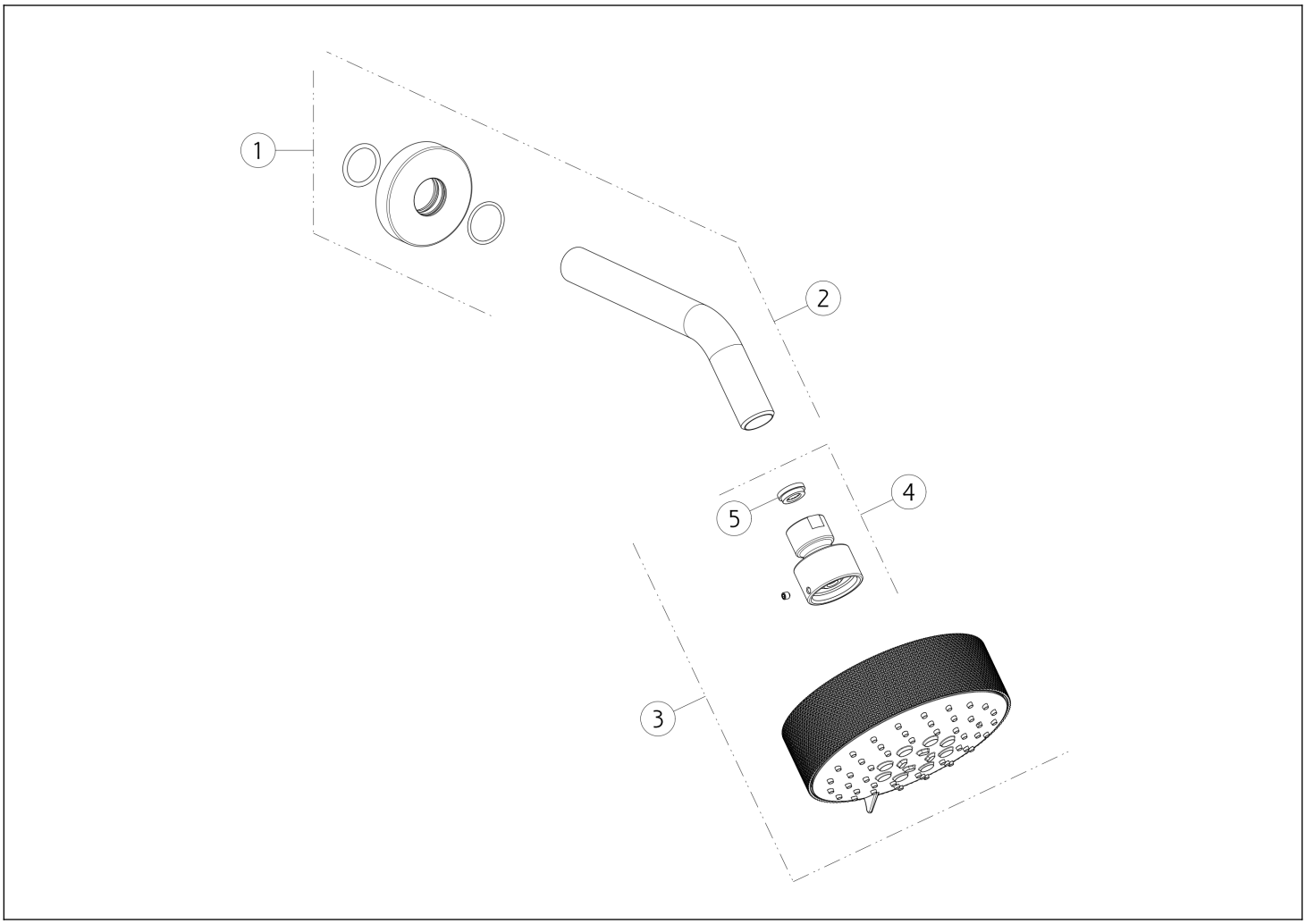

N°	Code	Description
1	SP05065	COVER
2	SP04774	SHOWER ARM
3	SP05067	SHOWERHEAD

N°	Code	Description
4	SP00244	JOINT
5	SP02191	FLOW REGOLATOR

Gessi S.p.A. Parco Gessi, 13037 Serravalle Sesia (Vercelli) Italy Tel. +39 0163 454111 Fax. +39 0163 453150 - www.gessi.com - gessi@gessi.it This drawing, as required by law, may not be made public or reproduced without the written authorization of GESSI S.p.A. Copyright GESSI S.p.A.