GESSI

63383

GPF6338300000G000

ANELLO

validity date
≥ 12/2020



External parts wall-mounted basin mixer, long spout, without waste

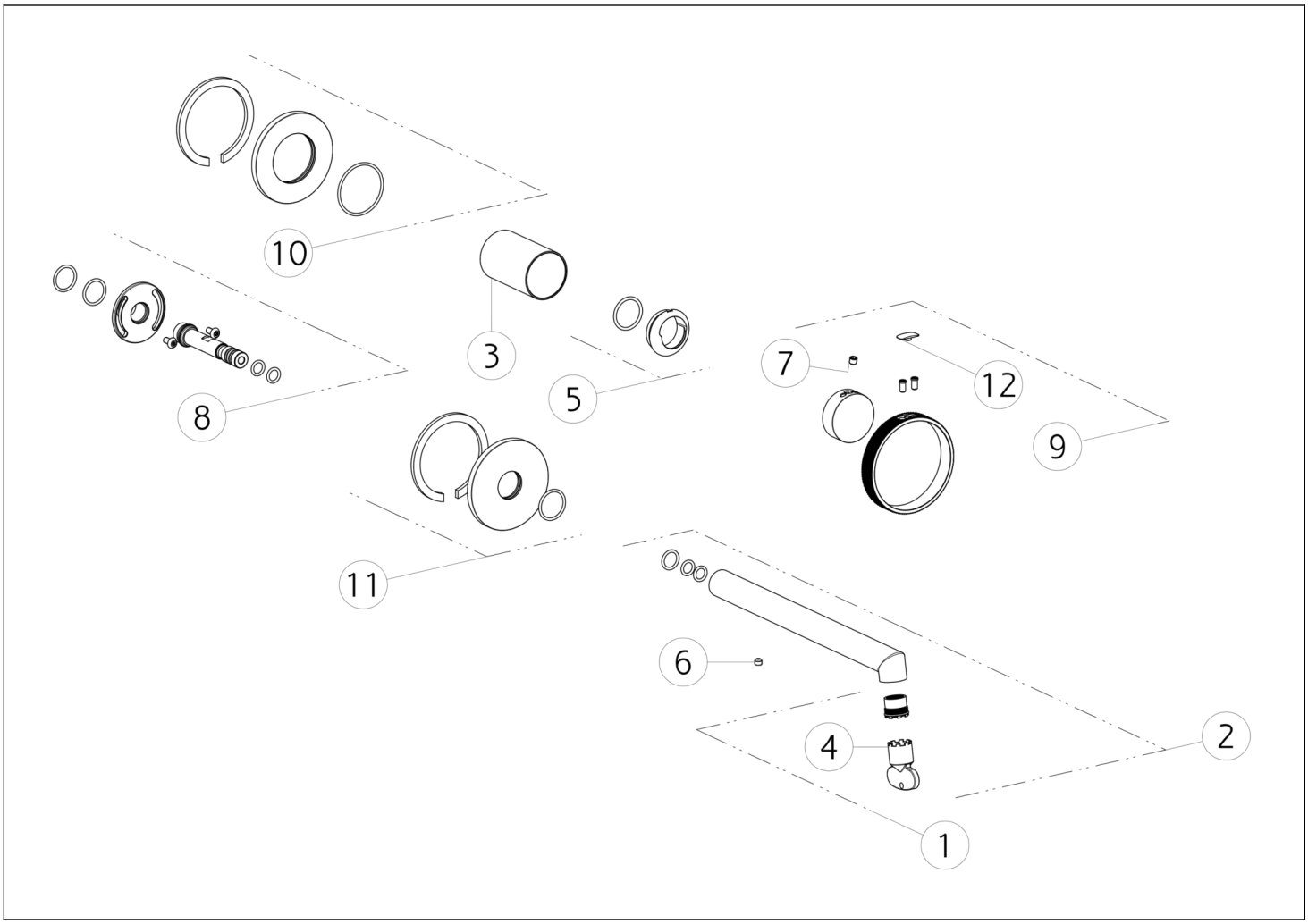

N°	Code	Description
1	SP01608	AERATOR
2	SP03271	COMPLETE SPOUT
3	SP03269	FINISHED BUSH
4	SP00504	KEY
5	SP03266	FINISHING RING NUT
6	SP00137	GRUB SCREW

N°	Code	Description
7	SP00610	GRUB SCREW
8	SP03272	JOINT
9	SP03164	HANDLE
10	SP03156	ROSETTE
11	SP03213	ROSETTE
12	SP03180	SCREW COVER

Gessi S.p.A. Parco Gessi, 13037 Serravalle Sesia (Vercelli) Italy Tel. +39 0163 454111 Fax. +39 0163 453150 - www.gessi.com - gessi@gessi.it This drawing, as required by law, may not be made public or reproduced without the written authorization of GESSI S.p.A. Copyright GESSI S.p.A.