GESSI

63501

GPF63501000000G000

INGRANAGGIO

validity date
≥ 01/2021



Basin mixer, flexible connections, with waste

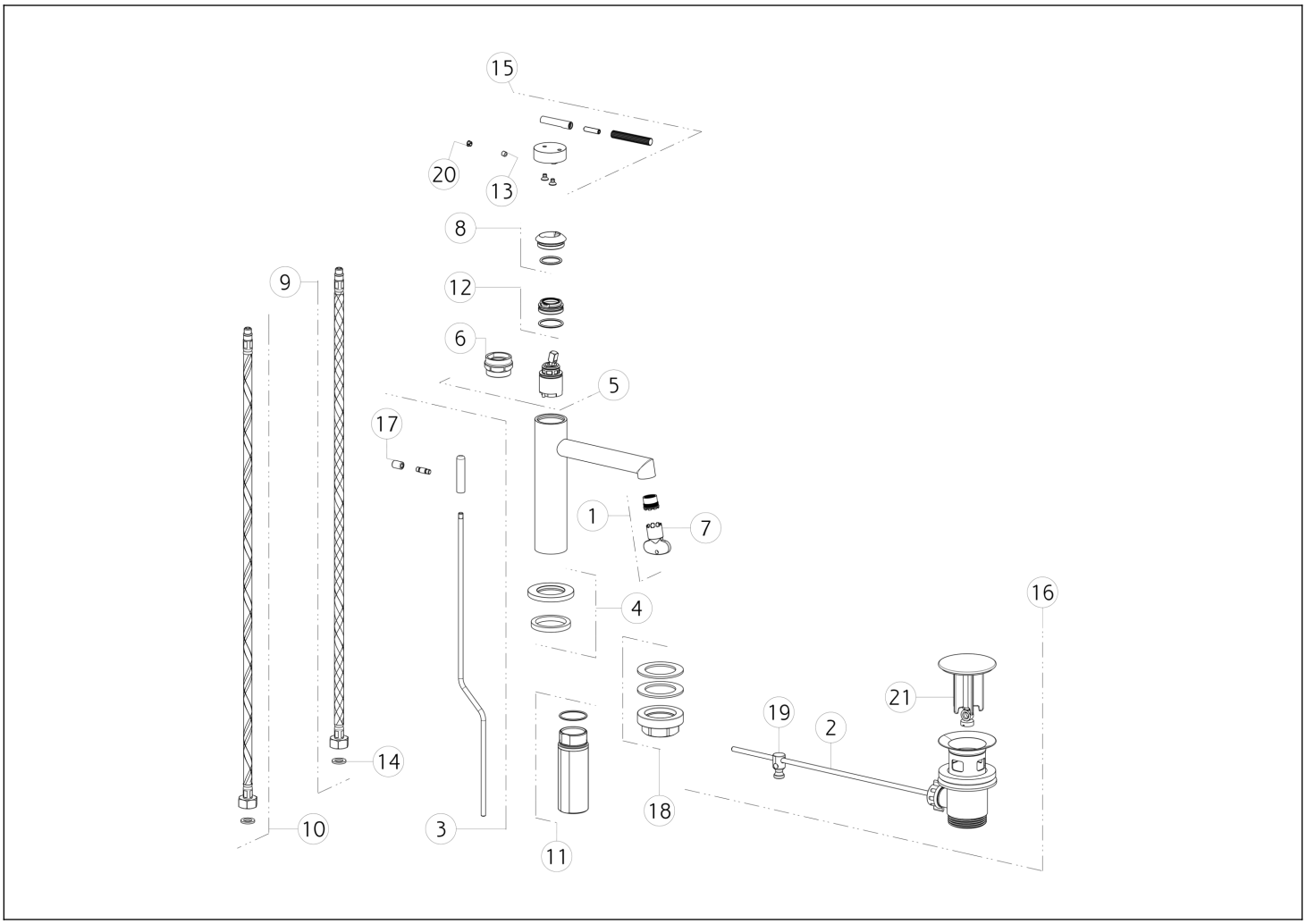

N°	Code	Description
1	SP01608	AERATOR
2	SP00218	ROD
3	SP03268	PULL ROD
4	SP03267	BASE
5	SP01277	CARTRIDGE
6	SP00216	SPECIAL TOOL
7	SP00504	SPECIAL TOOL
8	SP03266	FINISHING RING NUT
9	SP01591	BLU SUPPLY HOSE
10	SP01590	RED SUPPLY HOSE
11	SP02372	SHANK

N°	Code	Description
12	SP01278	FIXING RING NUT
13	SP00610	SCREW
14	SP00064	GASKET
15	SP03235	HANDLE
16	PF29263	BASIN WASTE
17	SP00927	KNOB
18	SP02370	FIXING SET
19	SP00219	JOINT
20	SP00002	SCREW COVER
21	SP00772	PLUG

 This drawing, as required by law, may not be made public or reproduced without the written authorization of GESSI S.p.A. Copyright GESSI S.p.A.