GESSI

63502

GPF63502000000G000

INGRANAGGIO

validity date
≥ 01/2021



Basin mixer, flexible connections, without waste

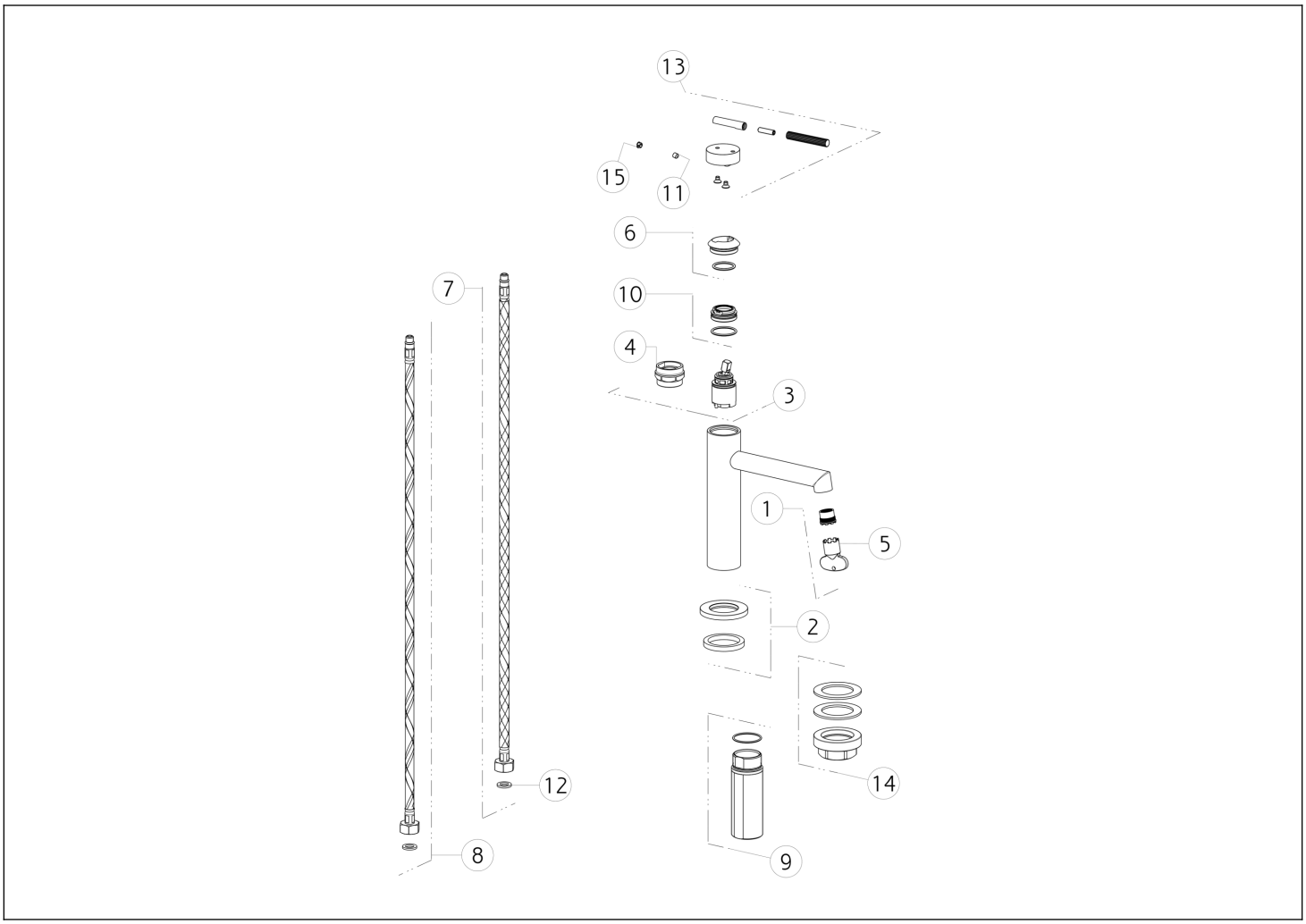

N°	Code	Description
1	SP01608	AERATOR
2	SP03267	BASE
3	SP01277	CARTRIDGE
4	SP00216	SPECIAL TOOL
5	SP00504	SPECIAL TOOL
6	SP03266	FINISHING RING NUT
7	SP01591	BLU SUPPLY HOSE
8	SP01590	RED SUPPLY HOSE

N°	Code	Description
9	SP02372	SHANK
10	SP01278	FIXING RING NUT
11	SP00610	SCREW
12	SP00064	GASKET
13	SP03235	HANDLE
14	SP02370	FIXING SET
15	SP00002	SCREW COVER

Gessi S.p.A. Parco Gessi, 13037 Serravalle Sesia (Vercelli) Italy Tel. +39 0163 454111 Fax. +39 0163 453150 - www.gessi.com - gessi@gessi.it This drawing, as required by law, may not be made public or reproduced without the written authorization of GESSI S.p.A. Copyright GESSI S.p.A.