GESSI

63550

GPF6355000000G000

validity date
≥ 03/2022



TONDO

Ceiling-mounted showerhead, length on request RIGATO

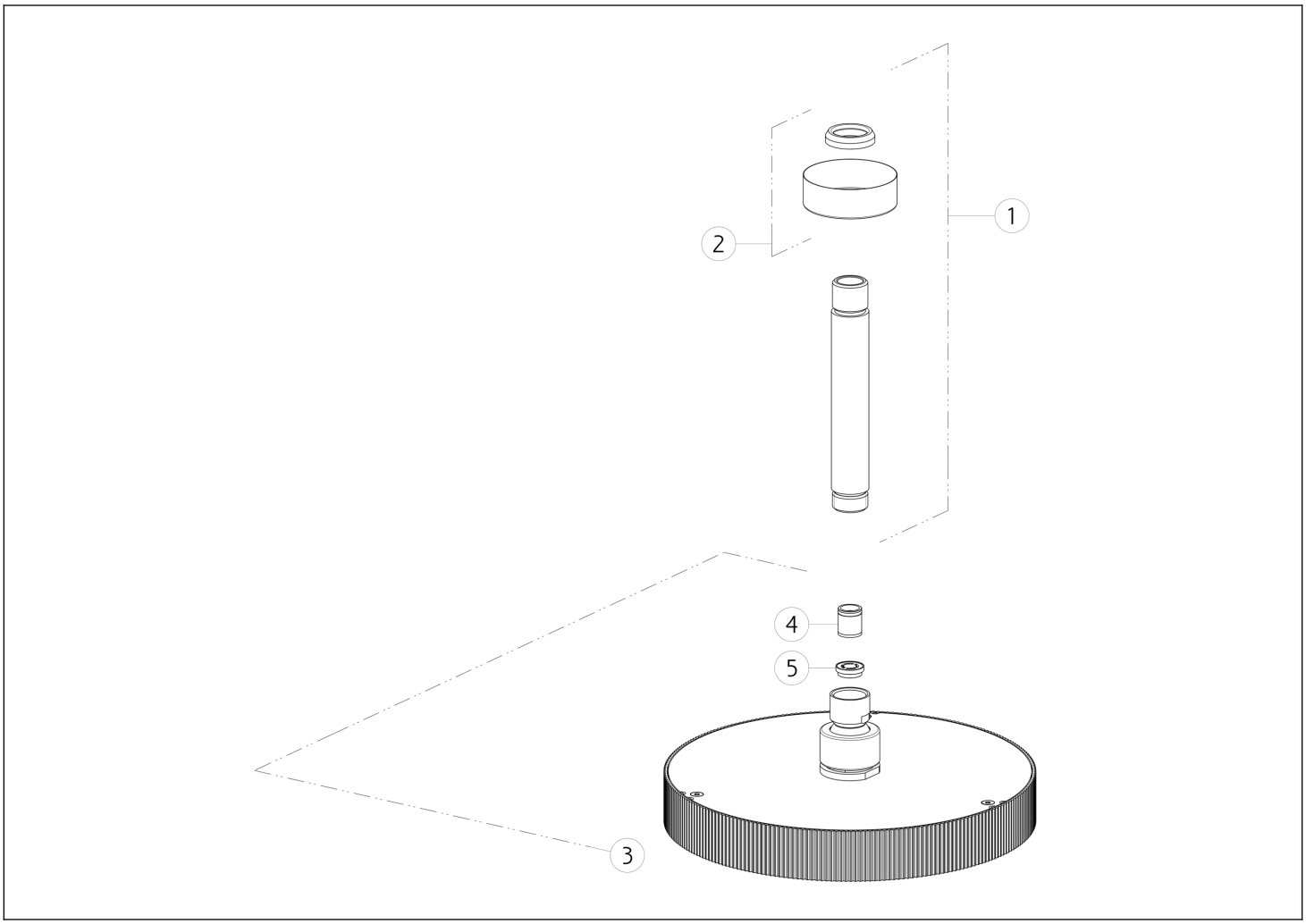

N°	Code	Description
1	SP03181	SHOWER ARM
2	SP03986	ROSETTE
3	SP00244	JOINT

N°	Code	Description
4	SP03365	SHOWERHEAD
5	SP02191	FLOW LIMITING VALVE

Gessi S.p.A. Parco Gessi, 13037 Serravalle Sesia (Vercelli) Italy Tel. +39 0163 454111 Fax. +39 0163 453150 - www.gessi.com - gessi@gessi.it This drawing, as required by law, may not be made public or reproduced without the written authorization of GESSI S.p.A. Copyright GESSI S.p.A.