GESSI

63582

GPF63582000000G000

TONDO

validity date
≥ 04/2021



Sliding rail with antilimestone handshower, 1,50 m flexible hose and water outlet. RIGATO.

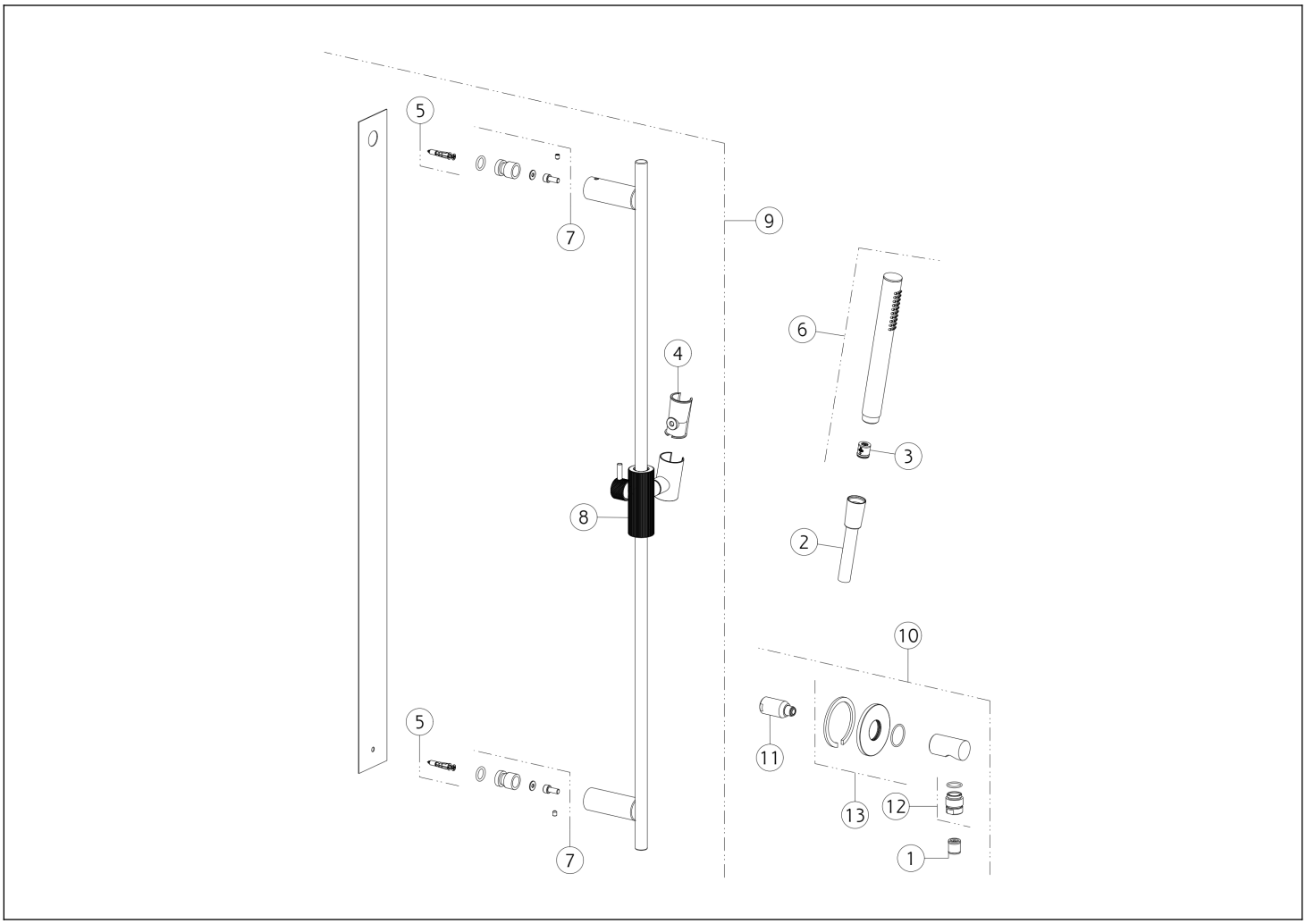

N°	Code	Description
1	SP00014	NON RETURN VALVE
2	PF01637	HOSE
3	SP01634	FLOW REGOLATOR
4	SP03468	SUPPORT
5	SP01775	FIXING SET
6	PF14371	HANDSHOWER
7	SP01760	FIXING SET

N°	Code	Description
8	SP03998	SLIDING SUPPORT
9	PF63585	SLIDING RAIL
10	PF63469	CONNECTION WATER OUTLET
11	SP04472	NIPPLE
12	SP01008	NIPPLE
13	SP03991	COVER

Gessi S.p.A. Parco Gessi, 13037 Serravalle Sesia (Vercelli) Italy Tel. +39 0163 454111 Fax. +39 0163 453150 - www.gessi.com - gessi@gessi.it This drawing, as required by law, may not be made public or reproduced without the written authorization of GESSI S.p.A. Copyright GESSI S.p.A.