GESSI

63613

GPF63613000000G000

TONDO

validity date
≥ 02/2023



Wall-mounted white dispenser

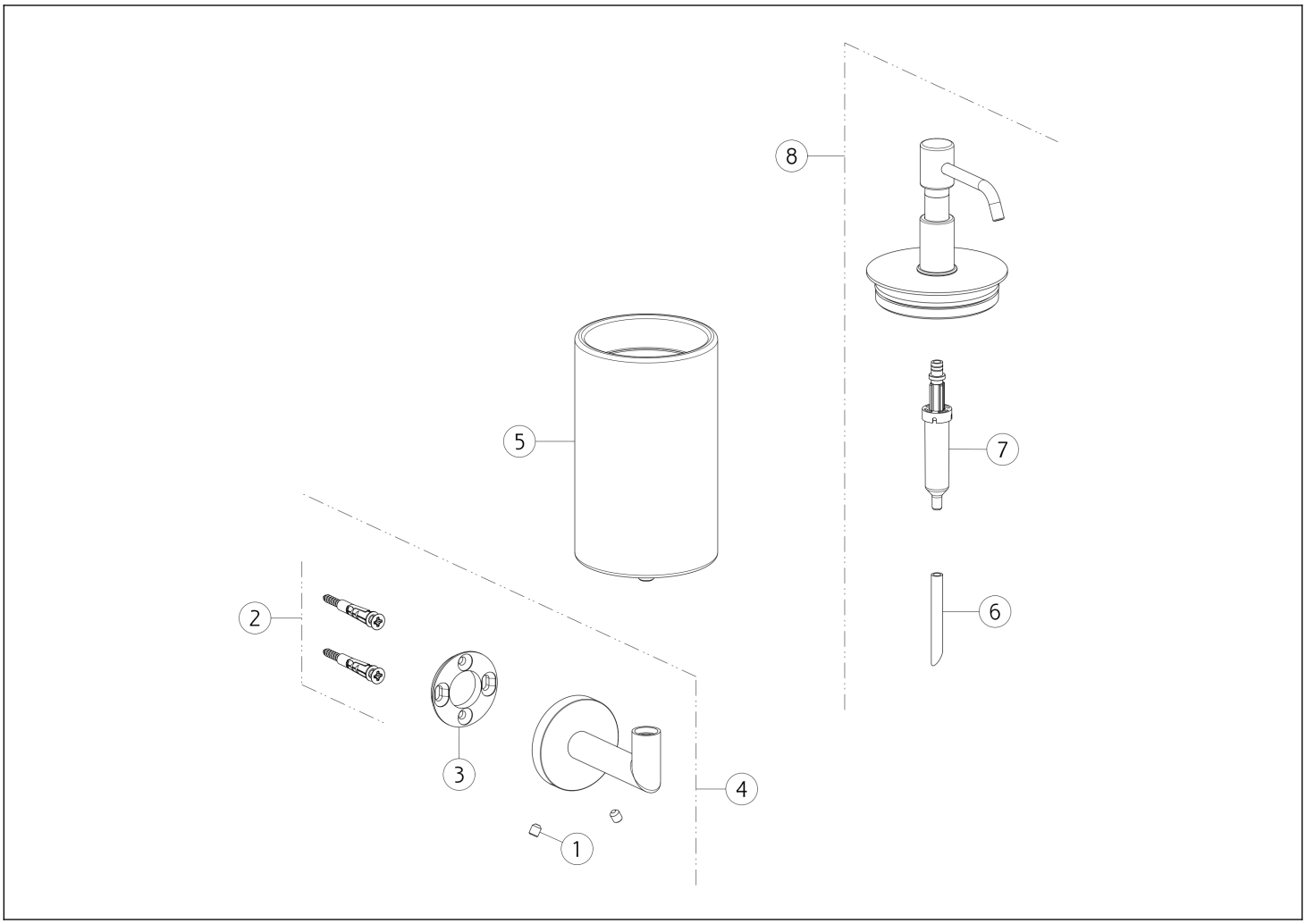

N°	Code	Description
1	SP00284	SCREW
2	SP00031	FIXING SET
3	SP03718	FIXING RING
4	SP04960	WALL SUPPORT

N°	Code	Description
5	SP02331	GLASS
6	SP00198	TUBE
7	SP00040	DISPENSER PUMP
8	SP02608	DISPENSER

Gessi S.p.A. Parco Gessi, 13037 Serravalle Sesia (Vercelli) Italy Tel. +39 0163 454111 Fax. +39 0163 453150 - www.gessi.com - gessi@gessi.it This drawing, as required by law, may not be made public or reproduced without the written authorization of GESSI S.p.A. Copyright GESSI S.p.A.