GESSI

63619

GPF63619000000G000

TONDO

validity date
≥ 01/2023



Wall-mounted white toilet brush holder

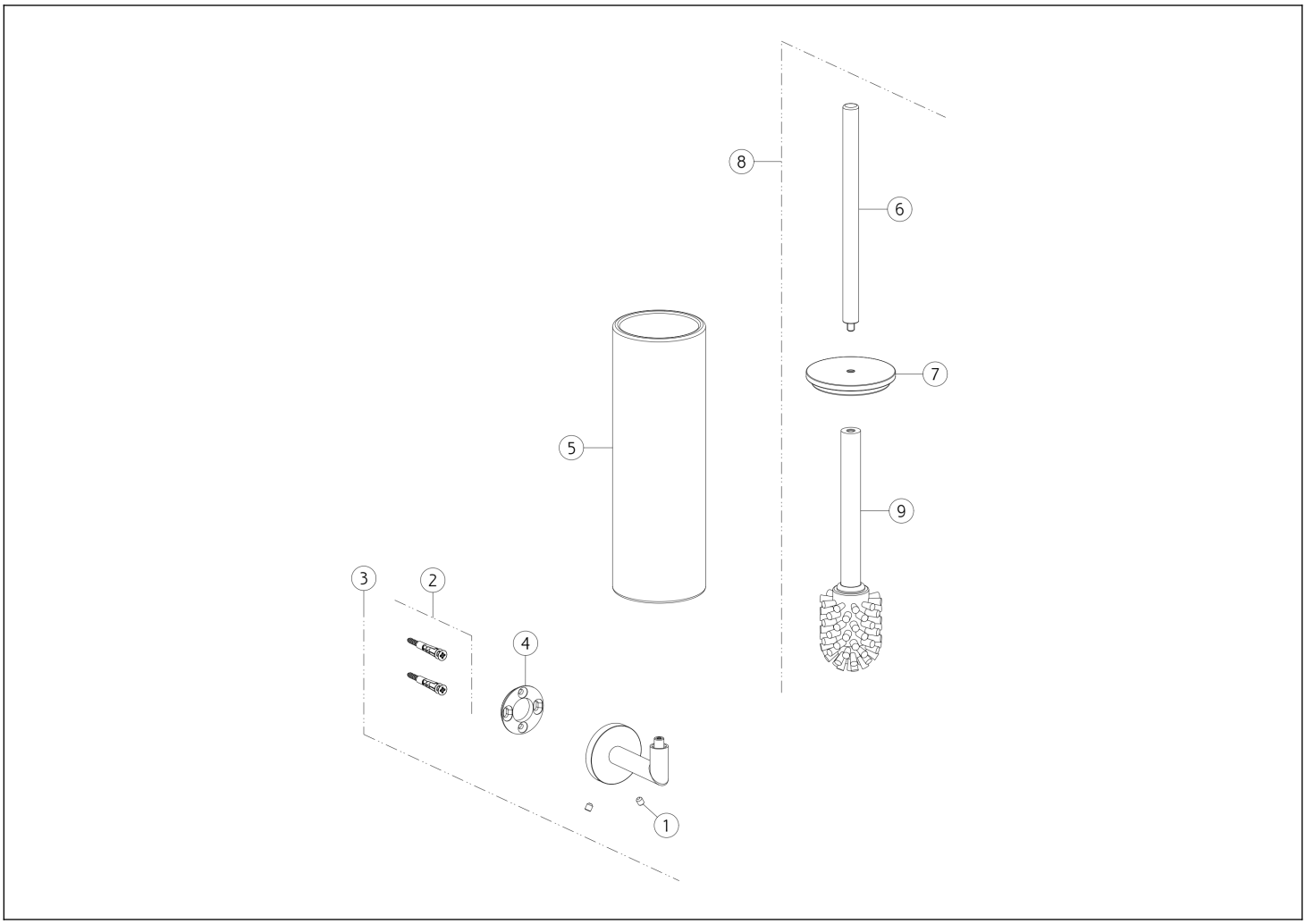

N°	Code	Description
1	SP00284	SCREW
2	SP00031	FIXING SET
3	SP04960	WALL SUPPORT
4	SP03718	FIXING RING
5	SP02520	BRUSH HOLDER

N°	Code	Description
6	SP00199	HANDLE
7	SP02615	DISC
8	SP03720	BRUSH WITH HANDLE
9	SP00870	BRUSH

Gessi S.p.A. Parco Gessi, 13037 Serravalle Sesia (Vercelli) Italy Tel. +39 0163 454111 Fax. +39 0163 453150 - www.gessi.com - gessi@gessi.it This drawing, as required by law, may not be made public or reproduced without the written authorization of GESSI S.p.A. Copyright GESSI S.p.A.