GESSI

63697

GPF63697100000G000

TONDO

validity date
≥ 11/2022



30 cm Towel rail

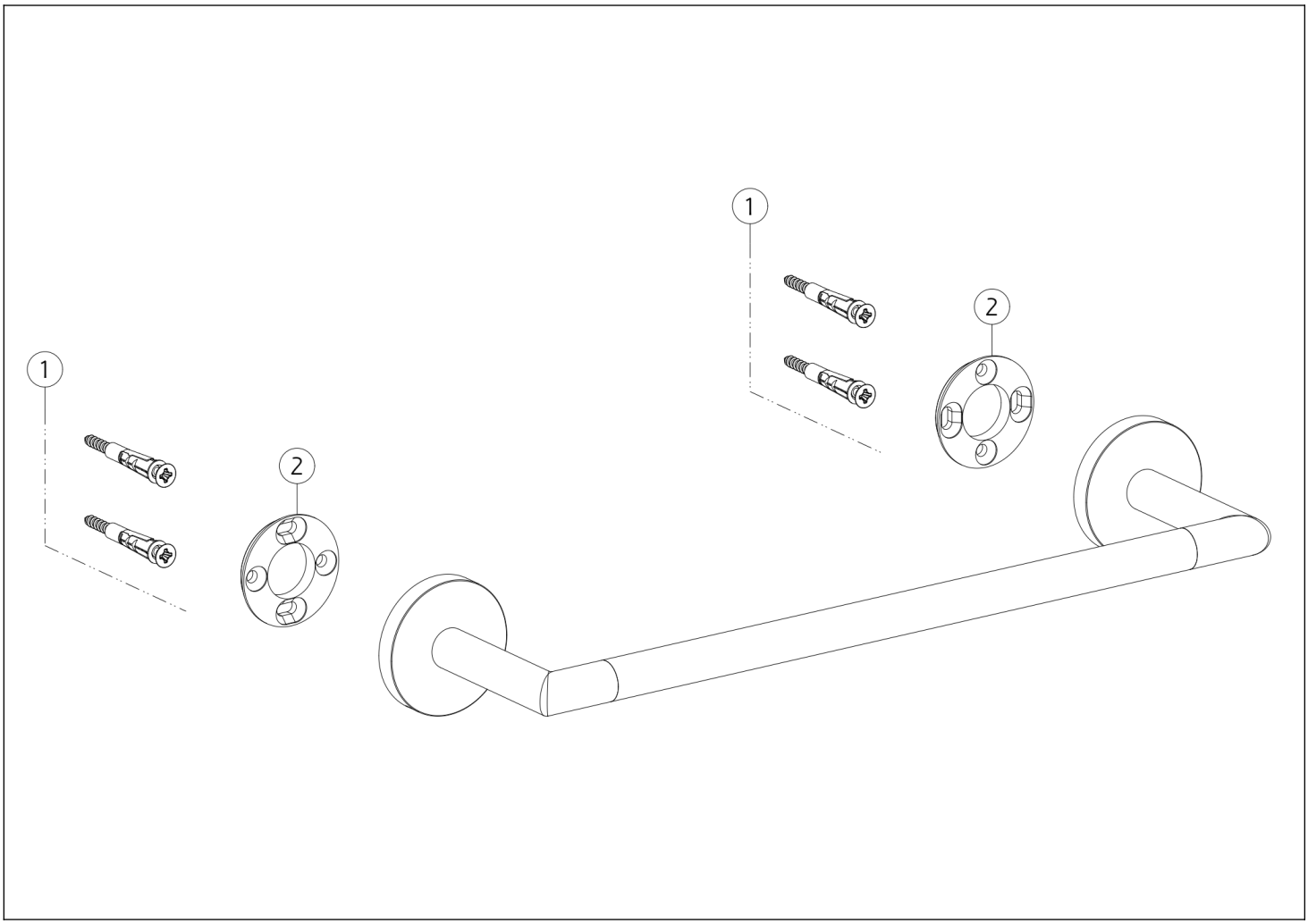

N°	Code	Description
1	SP00031	FIXING KIT

N°	Code	Description
2	SP03718	FIXING RING

Gessi S.p.A. Parco Gessi, 13037 Serravalle Sesia (Vercelli) Italy Tel. +39 0163 454111 Fax. +39 0163 453150 - www.gessi.com - gessi@gessi.it This drawing, as required by law, may not be made public or reproduced without the written authorization of GESSI S.p.A. Copyright GESSI S.p.A.