GESSI

63707

GPF6370700000G000

ANELLO

validity date
≥ 09/2021



Wall-mounted tumbler holder white

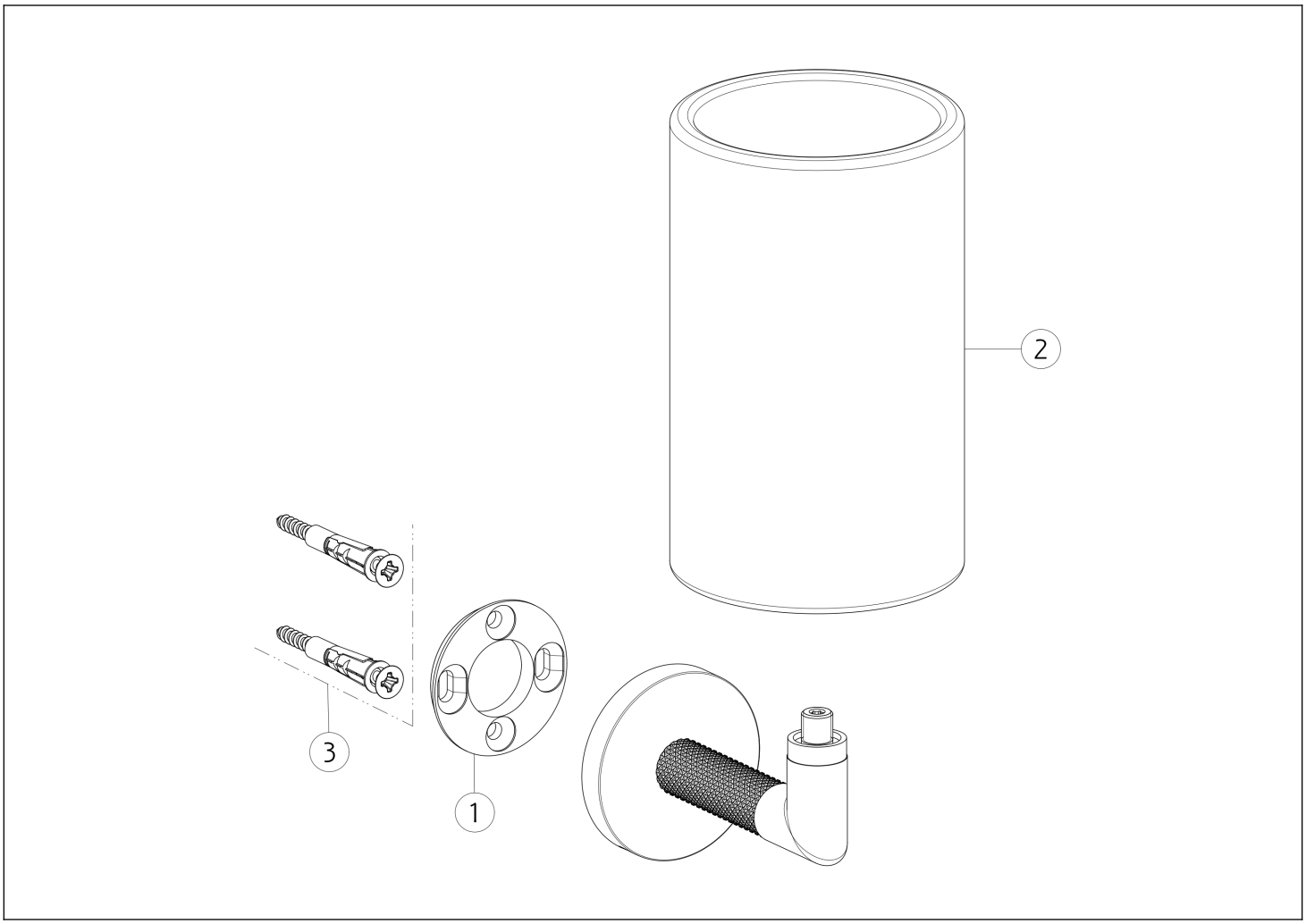

N°	Code	Description
1	SP03718	FIXING RING
2	SP02640	GLASS

N°	Code	Description
3	SP00031	FIXING SET

Gessi S.p.A. Parco Gessi, 13037 Serravalle Sesia (Vercelli) Italy Tel. +39 0163 454111 Fax. +39 0163 453150 - www.gessi.com - gessi@gessi.it This drawing, as required by law, may not be made public or reproduced without the written authorization of GESSI S.p.A. Copyright GESSI S.p.A.