GESSI

63720

GPF6372000000G000

ANELLO

validity date
≥ 02/2021



Black wall-mounted brush holder

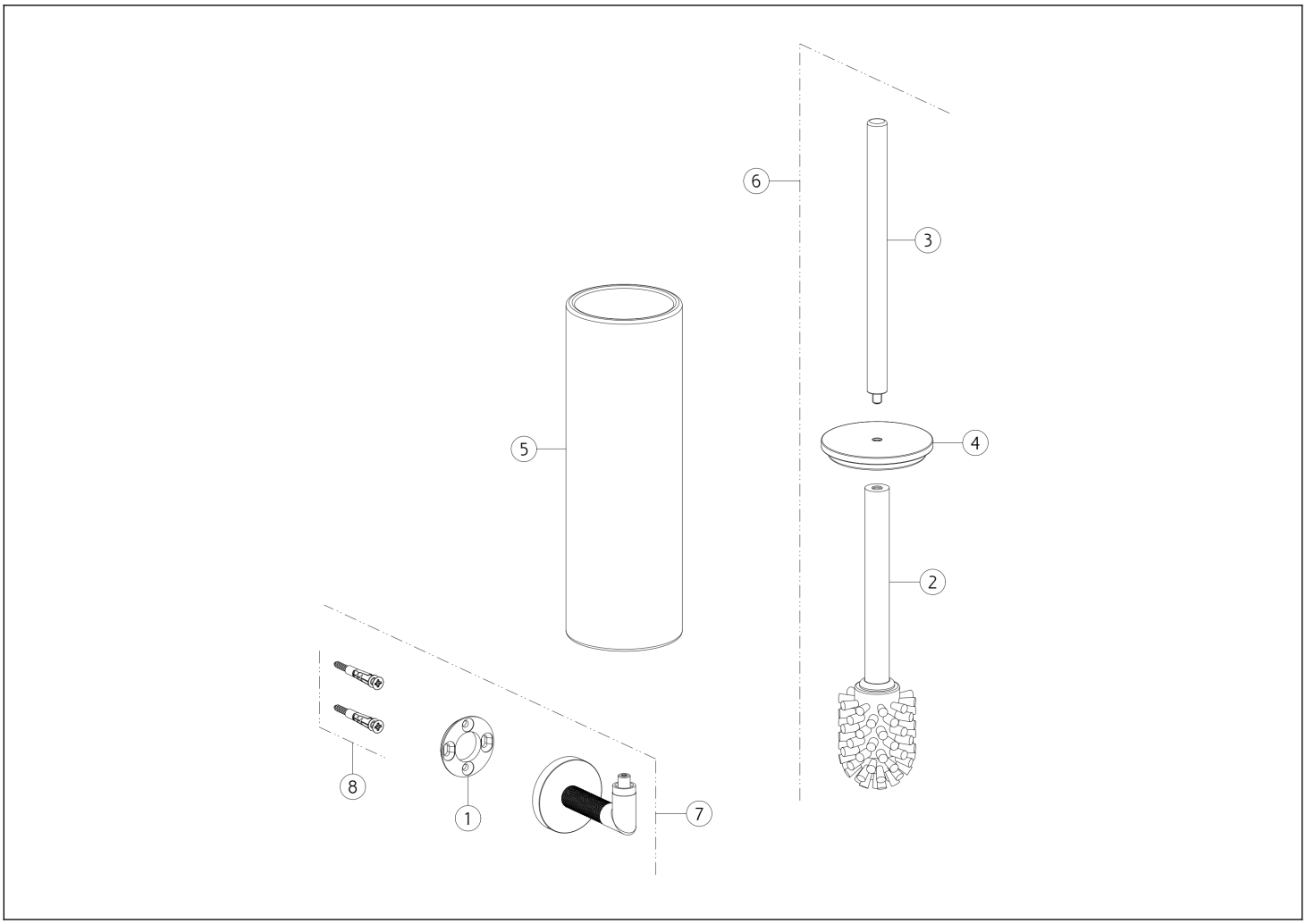

N°	Code	Description
1	SP03718	FIXING RING
2	SP00870	BRUSH
3	SP00199	HANDLE
4	SP02615	DISC

N°	Code	Description
5	SP02169	BRUSH HOLDER
6	SP03720	BRUSH WITH HANDLE
7	SP04292	WALL SUPPORT
8	SP00031	FIXING SET

Gessi S.p.A. Parco Gessi, 13037 Serravalle Sesia (Vercelli) Italy Tel. +39 0163 454111 Fax. +39 0163 453150 - www.gessi.com - gessi@gessi.it This drawing, as required by law, may not be made public or reproduced without the written authorization of GESSI S.p.A. Copyright GESSI S.p.A.