GESSI

63802

validity date
≥ 01/2021

GPF6380200000G000

INGRANAGGIO



Wall-mounted soap dish, black

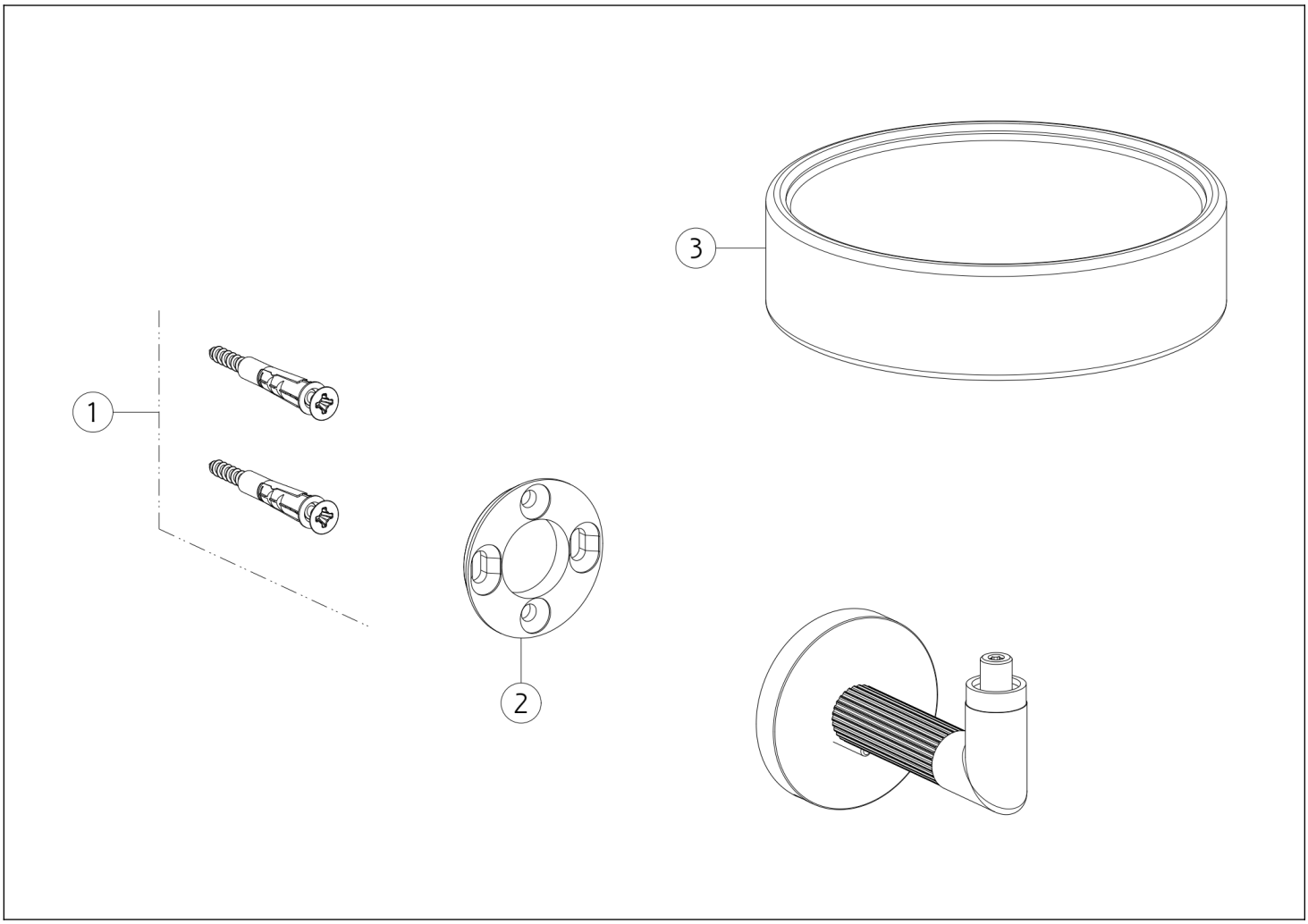

N°	Code	Description
1	SP00031	FIXING SET
2	SP03718	FIXING RING

N°	Code	Description
3	SP02605	SOAP HOLDER

Gessi S.p.A. Parco Gessi, 13037 Serravalle Sesia (Vercelli) Italy Tel. +39 0163 454111 Fax. +39 0163 453150 - www.gessi.com - gessi@gessi.it This drawing, as required by law, may not be made public or reproduced without the written authorization of GESSI S.p.A. Copyright GESSI S.p.A.