GESSI

63808

GPF63808000000G000

INGRANAGGIO

validity date
≥ 01/2021



Wall-mounted holder, black

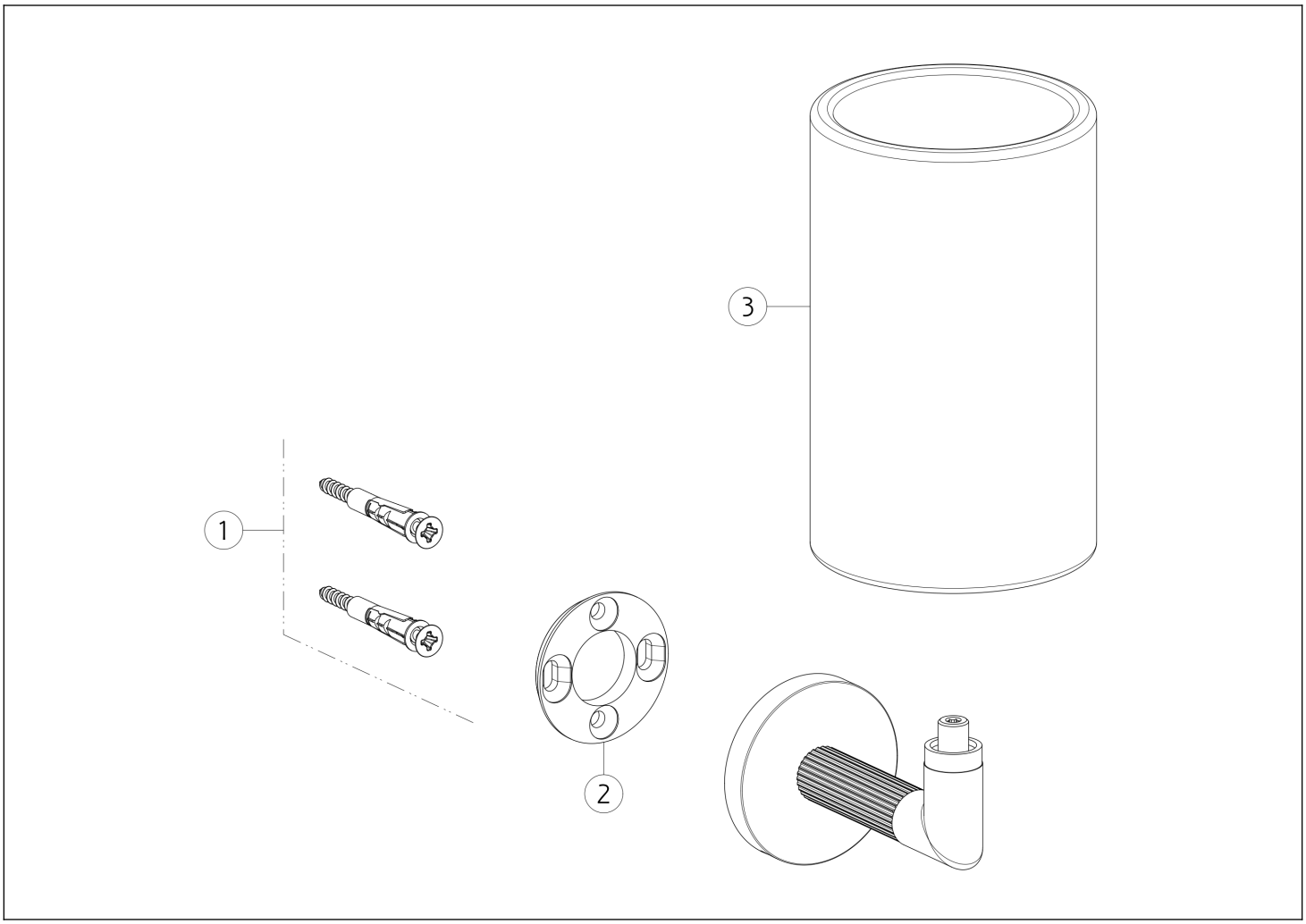

N°	Code	Description
1	SP00031	FIXING SET
2	SP03718	FIXING RING

N°	Code	Description
3	SP02641	GLASS

 This drawing, as required by law, may not be made public or reproduced without the written authorization of GESSI S.p.A. Copyright GESSI S.p.A.