GESSI

63820

validity date
≥ 02/2021



GPF6382000000G000

INGRANAGGIO

Wall-mounted brush holder, black

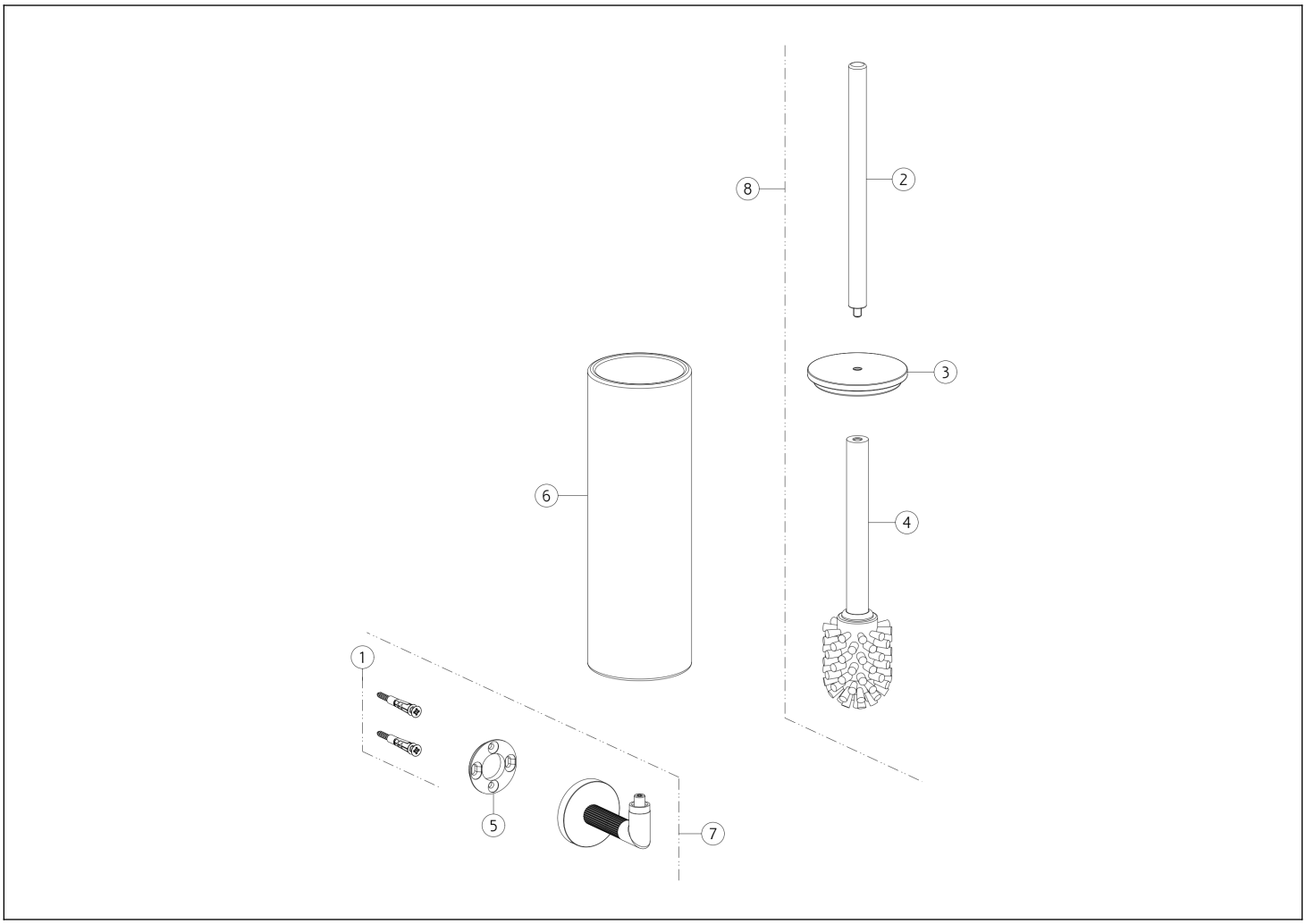

N°	Code	Description
1	SP00031	FIXING SET
2	SP00199	HANDLE
3	SP02615	DISC
4	SP00870	BRUSH

N°	Code	Description
5	SP03718	FIXING RING
6	SP02169	BRUSH HOLDER
7	SP03547	WALL SUPPORT
8	SP03720	BRUSH WITH HANDLE

Gessi S.p.A. Parco Gessi, 13037 Serravalle Sesia (Vercelli) Italy Tel. +39 0163 454111 Fax. +39 0163 453150 - www.gessi.com - gessi@gessi.it This drawing, as required by law, may not be made public or reproduced without the written authorization of GESSI S.p.A. Copyright GESSI S.p.A.